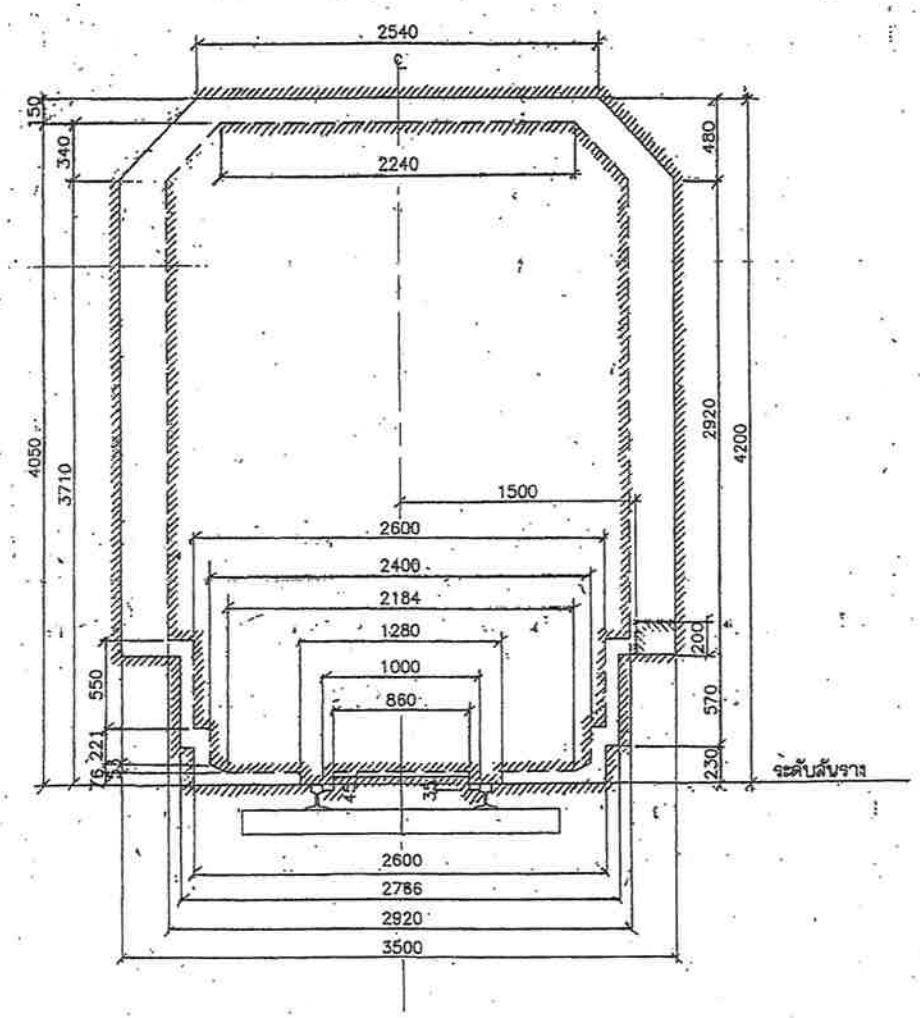

เขตโครงสร้าง (STRUCTURAL PROFILE)

เขตบรรทุก (LOADING PROFILE)

เขตโครงสร้างเฉพาะทางตัน และทางที่มีชานบรรทุก ห้ามใช้ในทางที่มีขบวนรถผ่านด้วยความเร็วปกติ

การรถไฟแห่งประเทศไทย

เขตโครงสร้าง และเขตบรรทุกสำหรับทางเดี่ยว

STRUCTURAL PROFILE & LOADING PROFILE IN GENERAL FOR SINGLE TRACK

สำหรับใช้	เกี่ยวกับแบบ		มาตราส่วน 1: 25	มิติ เป็นมิลลิเมตร
	เลขที่	รายการ		
ทั่วไป				

หมายเหตุ

เขตบรรทุกตามแบบนี้ใช้สำหรับการจัดหาหรือดัดแปลงล้อเลื่อนที่จะนำมาใช้การ

ผู้ออกแบบ	วรล.
ผู้กำกับการออกแบบ	วรล.
ผู้เห็นชอบ	วอฟ.
ผู้เห็นชอบ	วญธ.
ผู้เห็นชอบ	วญก.
ผู้เห็นชอบ	อตร.
ผู้เห็นชอบ	อพณ.
ผู้เห็นชอบ	วญญ.
ผู้อนุมัติ	รวก.2

ผู้เขียน ผู้ลอก

ผู้ตรวจ

28 ก.ค. 2549 แบบเลขที่ 1966-36

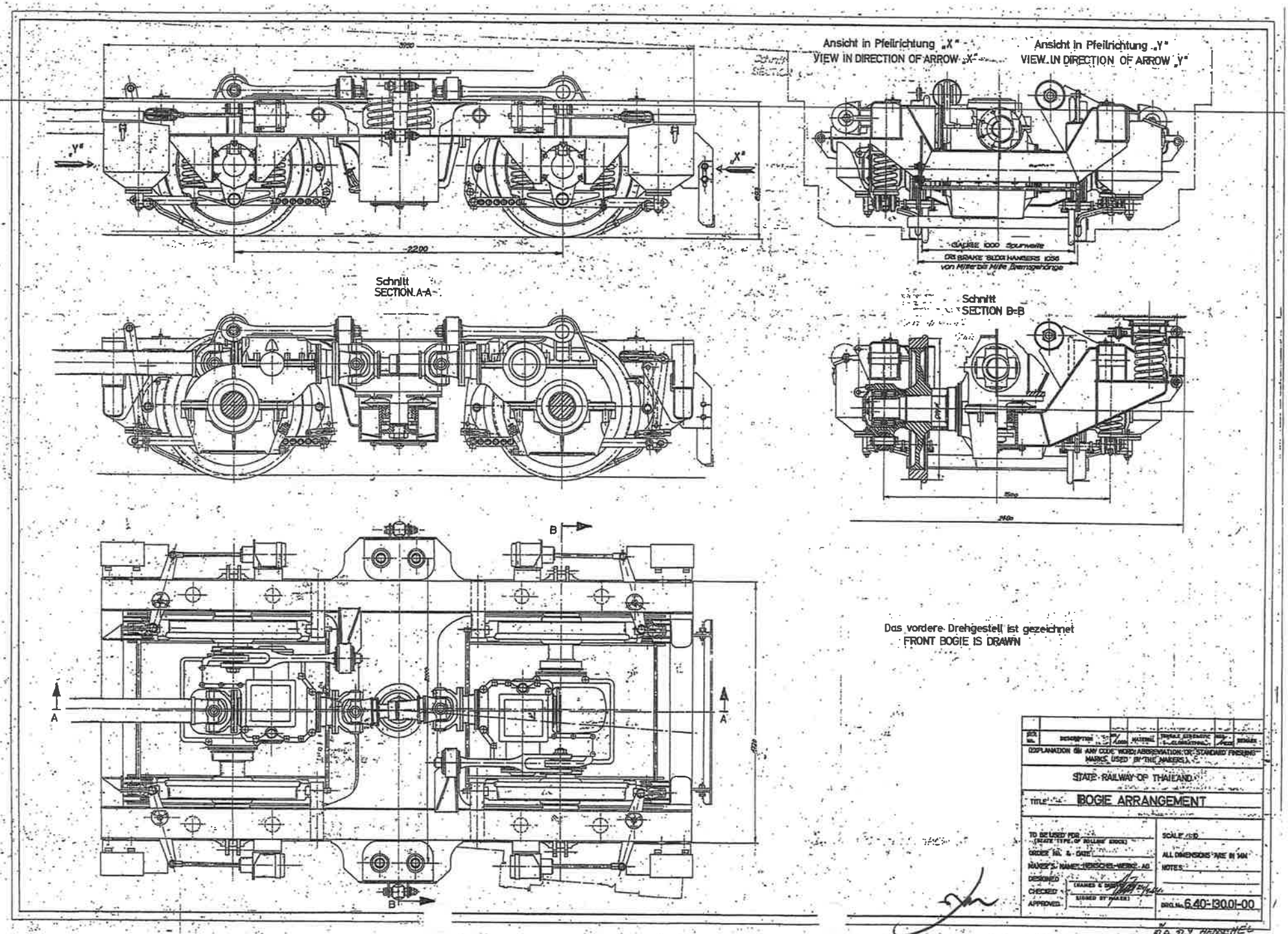
Ansicht in Pfeilrichtung „X"
VIEW IN DIRECTION OF ARROW „X"
Ansicht in Pfeilrichtung „Y"
VIEW IN DIRECTION OF ARROW „Y"
„Y"
„X"
2200
GAUGE 1000 Spurweite
DB BRAKE BLOCK HANGERS 1056
von Mitte bis Mitte Bremsgehänge
Schnitt
SECTION A-A
Schnitt
SECTION B-B
A
A
B
B
Das vordere Drehgestell ist gezeichnet
FRONT BOGIE IS DRAWN
STATE RAILWAY OF THAILAND
BOGIE ARRANGEMENT
SCALE 1:10
ALL DIMENSIONS ARE IN MM
NOTES
DRG. No. 6.40-130.01-00

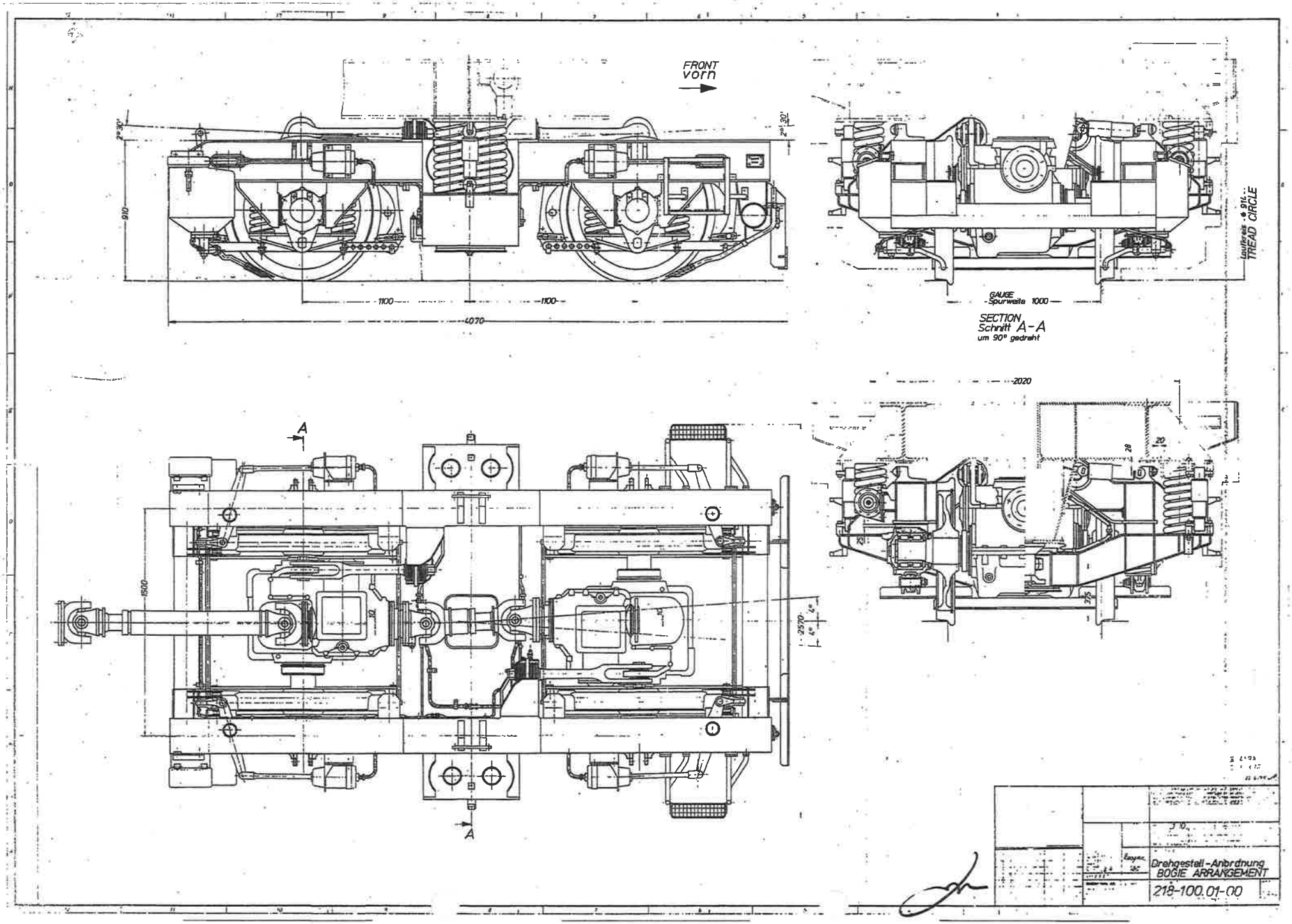
FRONT
vorn
2°30'
910
1100
1100
4070
GAUGE
Spurweite 1000
SECTION
Schnitt A-A
um 90° gedreht
Laufkreis ⌀ 914
TREAD CIRCLE
2020
28
20
375
A
A
1500
10
2570
6°
Drehgestell-Anordnung
BOGIE ARRANGEMENT
218-100.01-00

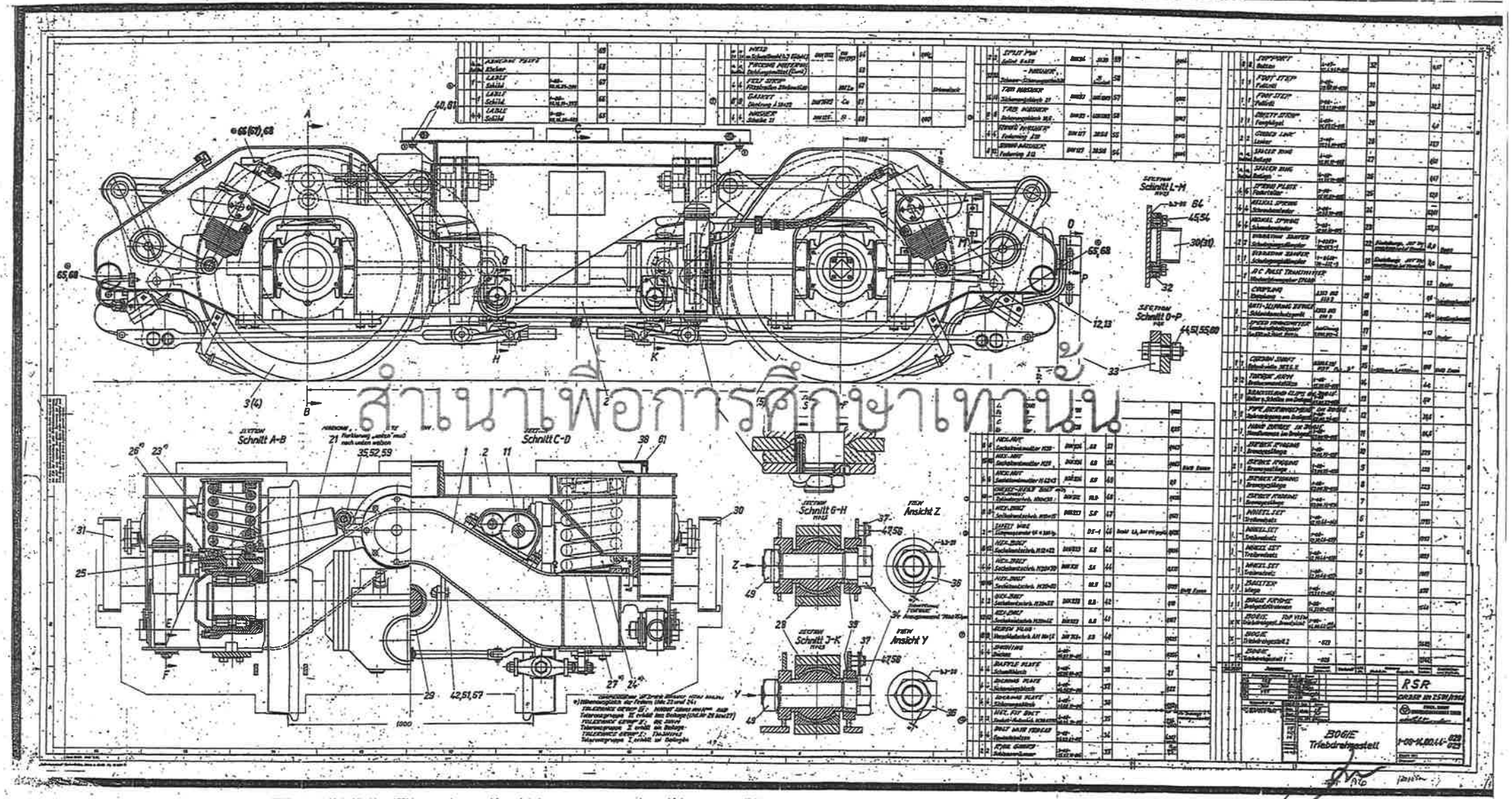

สำเนาเพื่อการศึกษาเท่านั้น

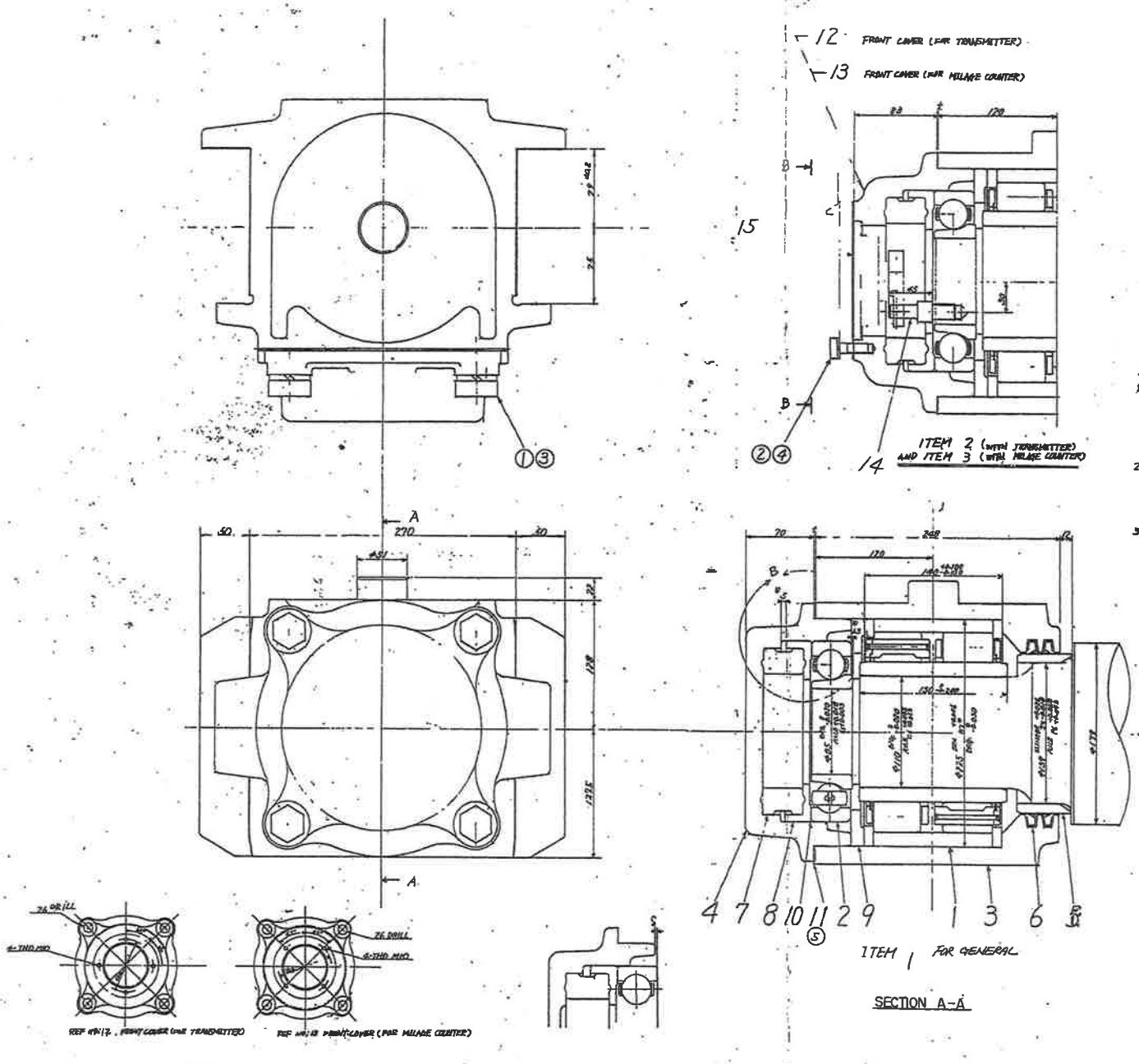

NOTE

1. THE INITIAL DEFLECTION OF THE "BUFFER RUBBER" SHALL BE OF 1~1.5mm AND THIS AMOUNT SHALL BE ADJUSTED WITH SHIMS (REF.No.10) BY INSERTING THEM BETWEEN "BUFFER SEAT" (REF.No.8) AND THE OUTER LACE. OF THE BALL BEARING (REF.No.3) AND SHALL BE MEASURED TO THE DIMENSION "S" SHOWN IN THE REFERENCE DRAWING.
2. IF THE CLEARANCE "A" BETWEEN THE FRONT COVER FLANGE AND THE AXLE BOX IS 0.3mm TO 1.5mm WHEN ASSEMBLED, USE 0.3~0.5mm THICK VINYL PACKING (REF.No.17) AND IF 1.5mm TO 2.75mm, USE 1~2mm THICK VINYL PACKING TO FASTEN TIGHT ENOUGH.
3. DIMENSION SHOWN WITH THE MARKING ⓢ IS OF THE STANDARD WHEN THE BOX IS ASSEMBLED ON THE JOURNAL.

			MARKS	NAME OF PARTS	No./SET	MATERIALS	TENSILE STRENGTH & ELONGATION	REMARKS
			ⓢ	LIQUID PACKING			THREE BOND 1102	
4	4	—	4	SPRING WASHER 10		SW50A		
4	4	4	3	SPRING WASHER 24		SW45A		
4	4	—	2	BOLT M10×35		SS41		
4	4	4	1	BOLT M24×60		SS41		
			16	GREASE			SHELL ALVANIA 2 OR EP2 450g/BOX	
1	1	—	15	PACKING		FIBER		E150-14716
1	1	—	14	CRANK PIN		S40C		E150-14720
1	—	—	13	FRONT COVER (FOR MILAGE COUNTER)		SC42		D150-13932-2
—	1	—	12	FRONT COVER (FOR TRANSMITTER)		SC42		D150-13932-1
1	1	1	11	PACKING		FIBER		D150-13988
1	1	1	10	SHIM		SPCC		D150-13987
1	1	1	9	PLATE RING		SS41		D150-14712
1	1	1	8	BUFFER SEAT		SS41		D150-14678
1	1	1	7	BUFFER RUBBER		RUBBER		D150-12430
2	2	2	6	GREASE SEAL		SYNTHETIC RUBBER		D150-03327
1	1	1	5	SLINGER		S45C		D150-14622
—	—	1	4	FRONT COVER		SC42		D150-14713
1	1	1	3	JOURNAL BOX		SC46		C150-14522
1	1	4	2	BALL BEARING		[illegible]		D150-14516
1	1	1	1	ROLLER BEARING		ASS'Y		D150-14515

R.S.R.	JOURNAL BOX ASS'Y
SCALES — 1/2	DIMENSIONS IN MM
USED FOR	PASSENGER CARRIAGES DIESEL RAILCARS AND BRAKE VANS
REF. DWG. No.	B150-12109
TOKYU CAR	
REMARKS	
APP.	EMT.
SANCD.	SEM.
DATE	1-1101DRC2-002
DR.	CH.

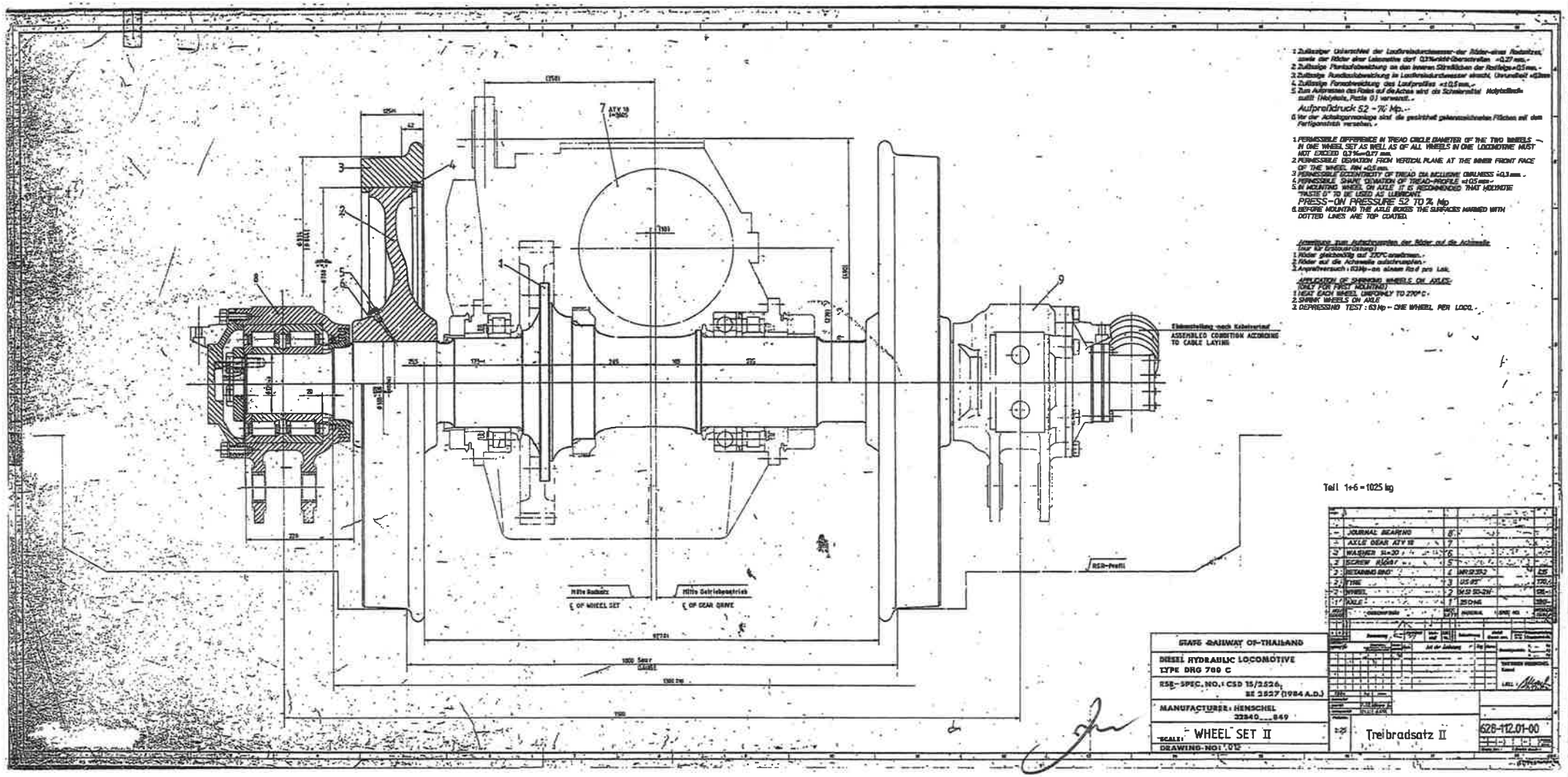
1. Zulässiger Unterschied der Laufkreisdurchmesser der Räder eines Radsatzes, sowie der Räder einer Lokomotive darf 0,3‰ nicht überschreiten =0,27 mm.-
2. Zulässige Planlaufabweichung an den inneren Stirnflächen der Reifen =0,5 mm.-
3. Zulässige Rundlaufabweichung im Laufkreisdurchmesser einschl. Unrundheit =0,3mm
4. Zulässige Formabweichung des Laufprofiles =±0,5 mm.-
5. Zum Aufpressen des Rades auf die Achse wird die Schmierpaste Molykoteflüssig (Molykote, Paste G) verwendet.-
Aufpreßdruck 52 - 70 Mp.--
6. Vor der Achsbolzenmontage sind die gekennzeichneten Flächen mit dem Farbgemisch versehen.-
1. PERMISSIBLE DIFFERENCE IN TREAD CIRCLE DIAMETER OF THE TWO WHEELS IN ONE WHEEL SET AS WELL AS OF ALL WHEELS IN ONE LOCOMOTIVE MUST NOT EXCEED 0,3‰=0,27 mm.
2. PERMISSIBLE DEVIATION FROM VERTICAL PLANE AT THE INNER FRONT FACE OF THE WHEEL RIM =0,5 mm.
3. PERMISSIBLE ECCENTRICITY OF TREAD DIA INCLUSIVE OVALNESS =0,3 mm.-
4. PERMISSIBLE SHAPE DEVIATION OF TREAD-PROFILE =±0,5 mm.-
5. IN MOUNTING WHEEL ON AXLE IT IS RECOMMENDED THAT MOLYKOTE "PASTE G" TO BE USED AS LUBRICANT.
PRESS-ON PRESSURE 52 TO 70 Mp
6. BEFORE MOUNTING THE AXLE BOXES THE SURFACES MARKED WITH DOTTED LINES ARE TOP COATED.
Anweisung zum Aufschrumpfen der Räder auf die Achsbolzen (nur für Erstmontierung)
1. Rädar gleichmäßig auf 270°C erwärmen.-
2. Räder auf die Achsbolzen aufschrumpfen.-
3. Anpreßversuch: 63Mp - an einem Rad pro Lok.
APPLICATION OF SHRINKING WHEELS ON AXLES (ONLY FOR FIRST MOUNTING)
1. HEAT EACH WHEEL UNIFORMLY TO 270° C.-
2. SHRINK WHEELS ON AXLE
3. DEPRESSING TEST : 63 Mp - ONE WHEEL PER LOCO.-
Montagezustand nach Kabelverlauf
ASSEMBLED CONDITION ACCORDING TO CABLE LAYING
Mitte Radsatz
℄ OF WHEEL SET
Mitte Getriebegetriebe
℄ OF GEAR DRIVE
RSB-Profil
Teil 1+6 = 1025 kg
JOURNAL BEARING 8
AXLE GEAR ATV 18 7
WASHER SL=20 6
SCREW M16x1 5
RETAINING RING 4
TYRE 3
WHEEL 2
AXLE 1
STATE RAILWAY OF THAILAND
DIESEL HYDRAULIC LOCOMOTIVE
TYPE DRG 700 C
RSB-SPEC. NO.: CSD 15/2526
BE 2527 (1984 A.D.)
MANUFACTURER: HENSCHEL
32840 ___ 849
WHEEL SET II
DRAWING-NO.: 012
Treibradsatz II
628-112.01-00

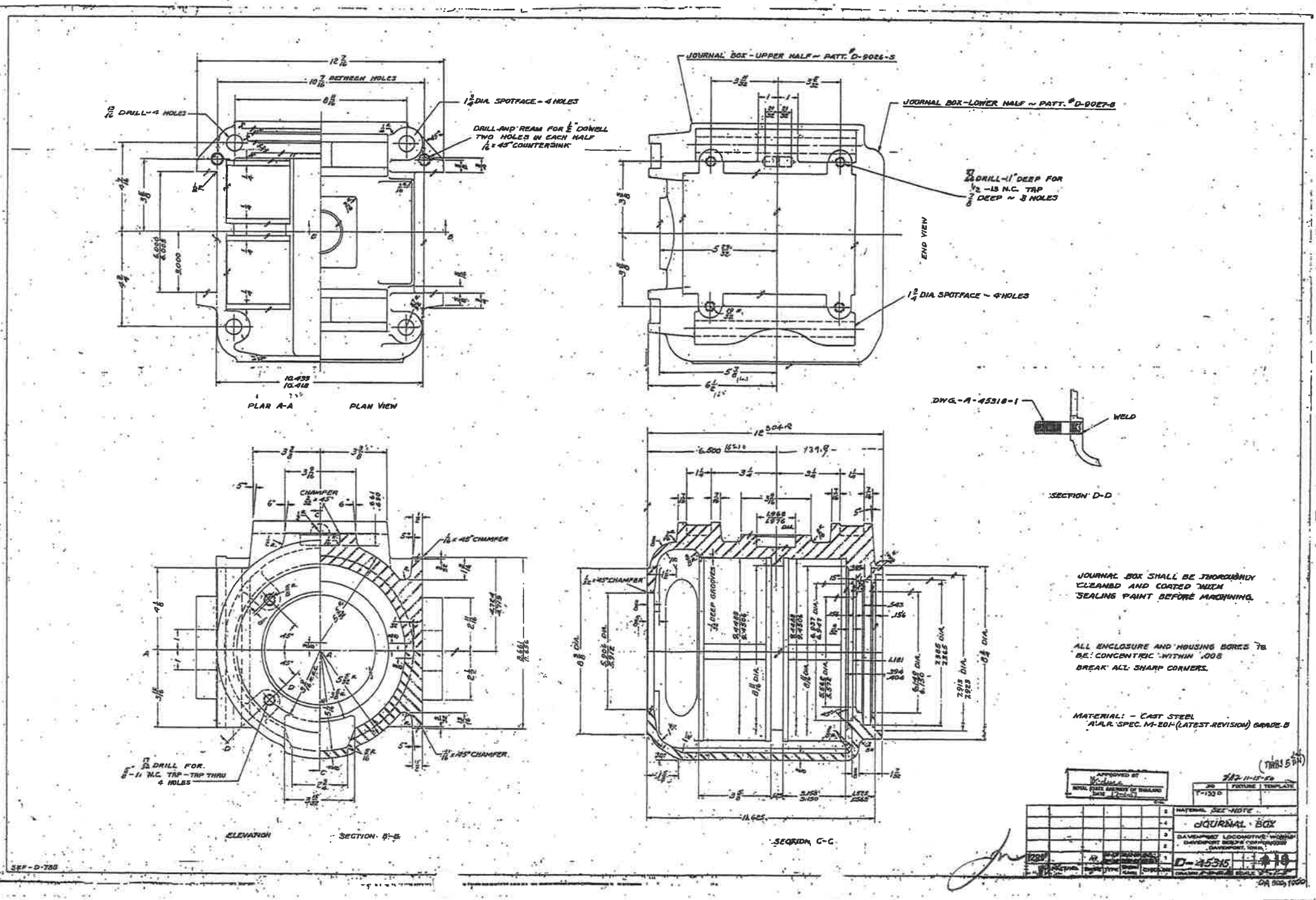
JOURNAL BOX - UPPER HALF ~ PATT. #D-9026-S
JOURNAL BOX - LOWER HALF ~ PATT. #D-9027-S
1 3/4 DIA. SPOTFACE ~ 4 HOLES
DRILL AND REAM FOR 1/2" DOWEL TWO HOLES IN EACH HALF 1/16 x 45° COUNTERSINK
DRILL 11" DEEP FOR 1/2 -13 N.C. TAP 7/8 DEEP ~ 8 HOLES
END VIEW
PLAN A-A
PLAN VIEW
DWG.-A-45318-1
WELD
SECTION D-D
CHAMFER 1/32 x 45°
1/16 x 45° CHAMFER
DRILL FOR 5/8-11 N.C. TAP - TAP THRU 4 HOLES
ELEVATION
SECTION B-B
1/4 x 45° CHAMFER
1/4 DEEP GROOVES
SECTION C-C
JOURNAL BOX SHALL BE THOROUGHLY CLEANED AND COATED WITH SEALING PAINT BEFORE MACHINING.
ALL ENCLOSURE AND HOUSING BORES TO BE CONCENTRIC WITHIN .008
BREAK ALL SHARP CORNERS.
MATERIAL: - CAST STEEL A.A.R. SPEC. M-201-(LATEST REVISION) GRADE B
JOURNAL BOX
DAVENPORT LOCOMOTIVE WORKS
DAVENPORT, IOWA
D-45315
SEF-D-788

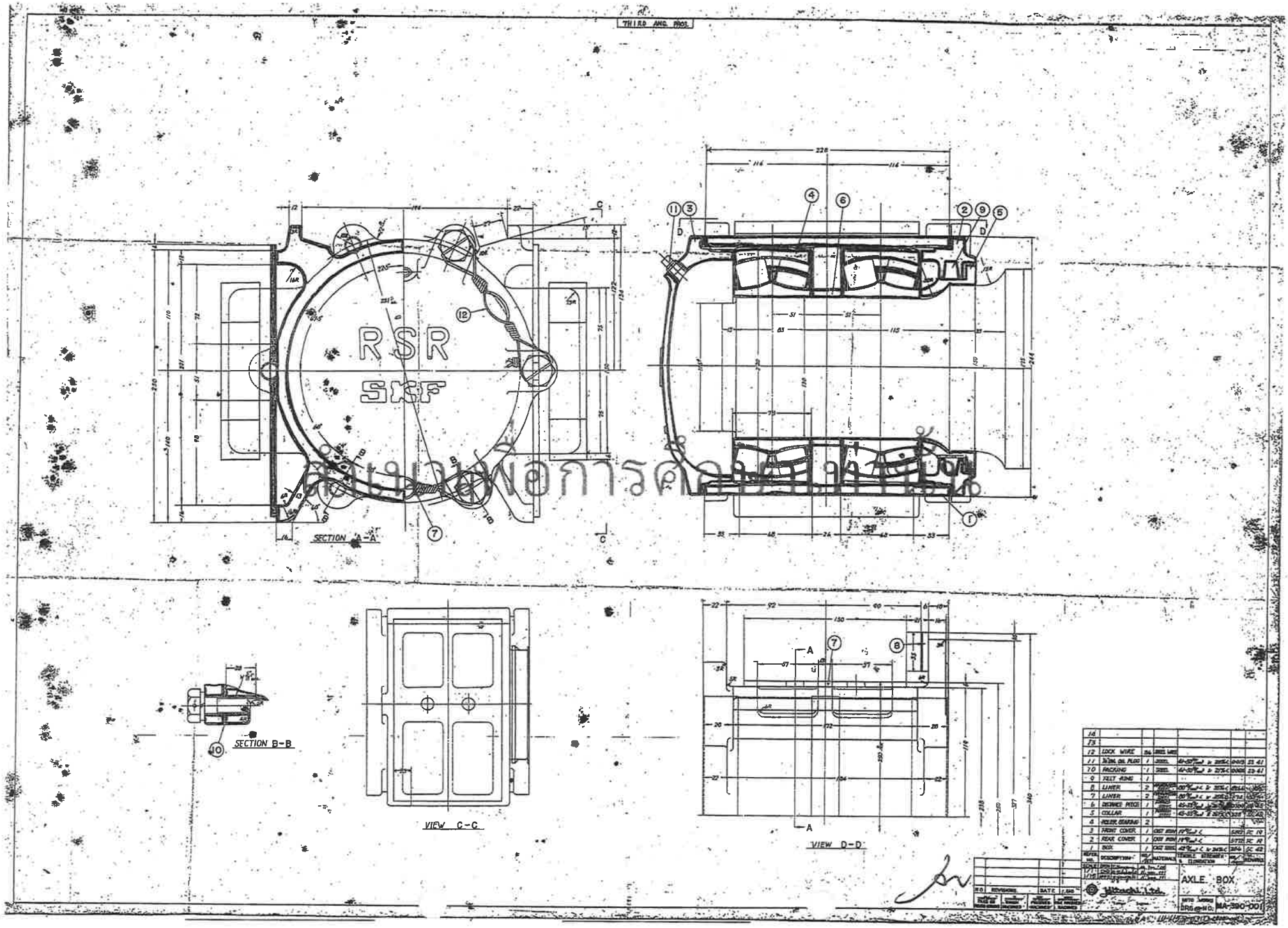

สำหรับเพื่อการศึกษาเท่านั้น

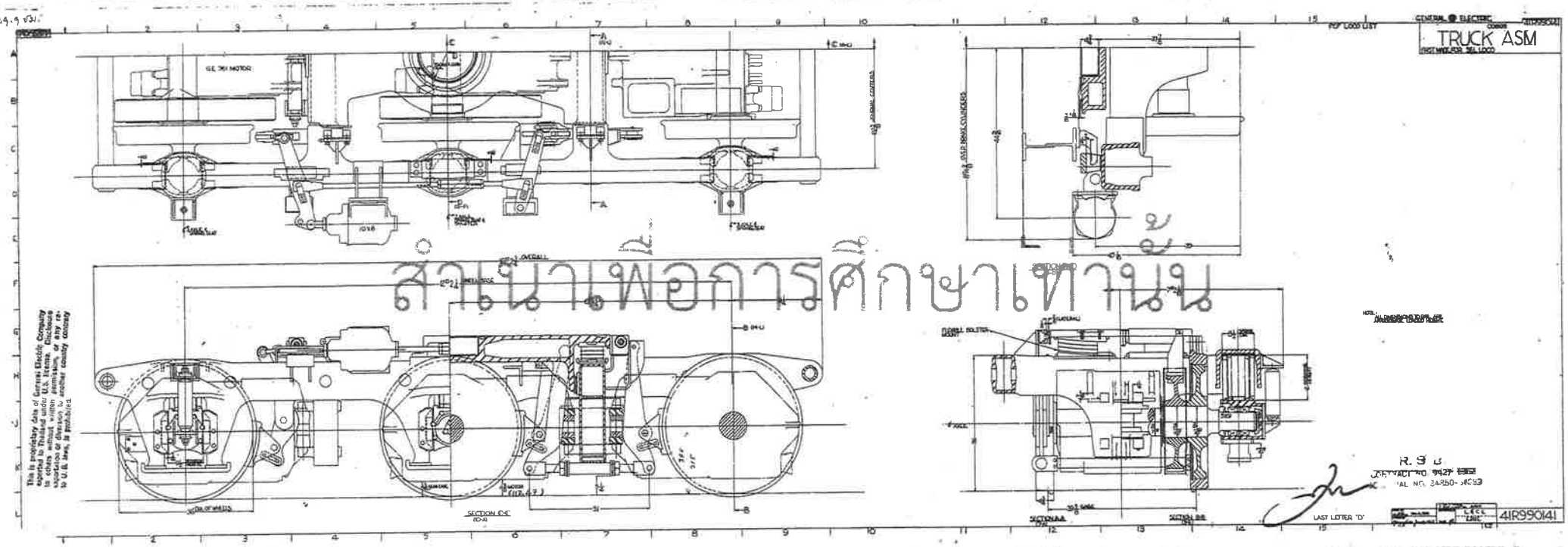

สำเนาเพื่อการศึกษาเท่านั้น

PAGE

JOURNAL AXLE BOX AND ROLLER BEARING FOR PASSENGER CARS

REVISED	

MECHANICAL DEPARTMENT R. S. R.

FOLIO No. F 0007/1

DR. H. Bdt. CH. R.S. CH. CH.

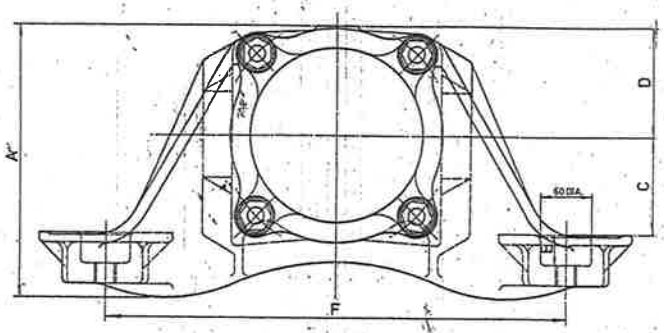

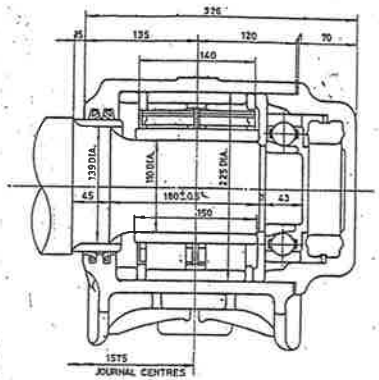

CYLINDRICAL TYPE, JOURNAL SIZE 110 DIA. X 180 MM.

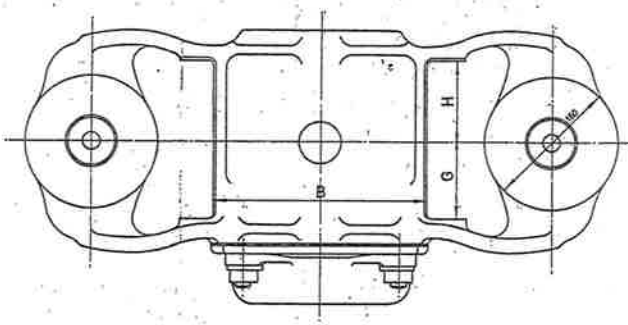

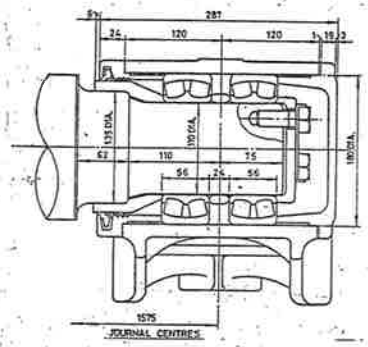

SPHERICAL TYPE, JOURNAL SIZE 110 DIA. X 185 MM.

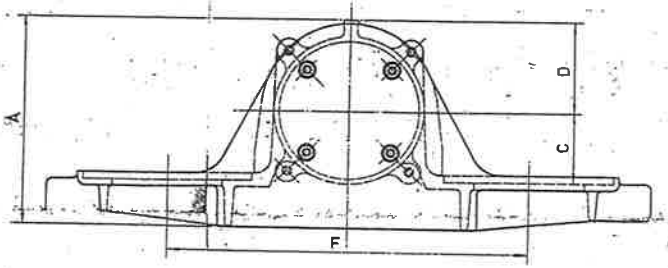

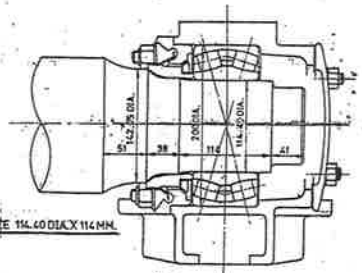

B.4. JOURNAL SIZE 114.60 DIA. X 114 MM.

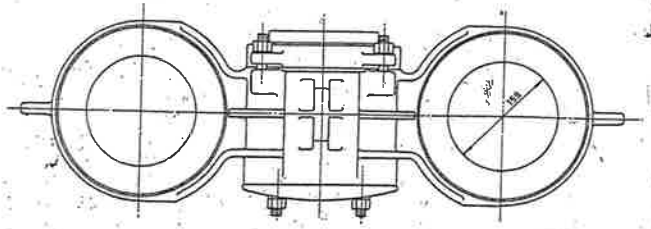

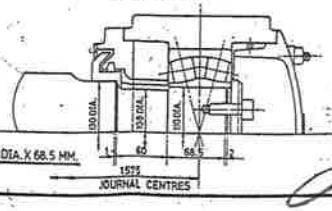

10F. JOURNAL SIZE 110 DIA. X 68.5 MM.

CYLINDRICAL

ITEM	DESCRIPTION	MAKER'S NAME & No OF CYLINDRICAL ROLLER BEARING TYPE	YEAR PUT IN SERVICE	DIMENSIONS IN MM. A	B	C	D	E	F	G	H	REMARKS (จำนวนแห่ง)
1	BTC. TEIKOKU No 1001-1020	"NSK" No JC1 WITH THRUST BALL BEARING No JB1	2509	322	255	115.	130	19	550	95	98.5	40
2	60 BOGIES FUJI TYPE PC-26	"KOYO" No 2U110-CS WITH THRUST BALL BEARING No S6317	2509	322	255	115	130	35	550	95	98.5	60
3	BNS. HITACHI No 1001-1036 KH-26	"KOYO" No 2U110-CS. WITH THRUST BALL BEARING No S6317	2510	322	255	115	130	35	550	95	98.5	72
4	BTC. No 1021-1026 & BTV. No 1001-1002 (PC26)	"KOYO" No. 2U110-CS WITH THRUST BALL BEARING No S6317	2510	322	255	115	130	19	550	95	98.5	16
5	BFS. KINKI No 1001-1002	"NSK" No JC1 WITH THRUST BALL BEARING No JB1	2510	322	255	115	130	19	550	95	98.5	4
6	AFC. No 3 & 4 TB-65 (TEIKOKU)	"NSK" No JC1 WITH THRUST BALL BEARING No JB1	2511	322	255	115	130	19	550	95	98.5	10
7	ANF. No 1-8 TB-65 (HITACHI)	"NSK" No JC1 WITH THRUST BALL BEARING No JB1	2511	322	255	115	130	19	550	95	98.5	14
8	ARS. KINKI No 2	"NSK" No JC1 WITH THRUST BALL BEARING No JB1	2512	322	255	115	130	19	550	95	98.5	2
9	150 BOGIES "FUJI" TYPE PC-26	"KOYO" No 2U110-CS WITH THRUST BALL BEARING No S6317CS	2516	322	255	115	130	35	550	95	98.5	150
10	100 BOGIES "FUJI" TYPE TS-309	"NSK" No JC1 WITH THRUST BALL BEARING No JB.10	2518	322	255	115	130	35	550	95	98.5	100
11	266 BOGIES "FUJI" TYPE PC-26A	"KOYO" No 2U110-CS.PZ WITH THRUST BALL BEARING No S.6317-CS.PQ	2518	322	255	115	130	35	550	95	98.5	266
12	260 BOGIES "KAWASAKI"	"NSK" No JC1 WITH THRUST BALL BEARING No J3.10	2518	322	255	115	130	35	550	95	98.5	260
13	100 BOGIES "OREA" TYPE KH-L	"NSK" No JC1 WITH THRUST BALL BEARING No JB1	2519	322	255	115	130	35	550	95	98.5	100
14	68 BOGIES TYPE KH-L2 32 BOGIES TYPE KH-L2A	"NSK" No JC1 WITH TRUST BALL BEARING No JB1	2523	322	255	115	130	35	550	95	98.5	68+32

SPHERICAL

ITEM	DESCRIPTION	MAKER'S NAME & No OF SPHERICAL ROLLER BEARING TYPE	YEAR PUT IN SERVICE	DIMENSIONS IN MM. A	B	C	D	E	F	G	H	REMARKS (จำนวนแห่ง)
1	82 BOGIES "KAWASAKI"	"SKF" DOUBLE ROWS WITHOUT WITH DRAWAL SLEEVE ROLLER BEARING No 21122C/C3	2511	295	215	115	110	[illegible]	550	[illegible]	[illegible]	[illegible]
2	330 BOGIES "FUJI" TYPE PC-25	"SKF" DOUBLE ROWS WITHOUT WITH DRAWAL SLEEVE ROLLER BEARING No 23122C/C3	2511	295	215	115	110	35	550	95	98.5	330
3	100 BOGIES "FUJI" TYPE PC-25A	"SKF" DOUBLE ROWS WITHOUT WITH DRAWAL SLEEVE ROLLER BEARING No 23122C/C3	2512	295	215	115	110	35	550	95	98.5	100
4	ANF. 8-13 & BRC 1001-1005 (KAWASAKI) (ANF. 8-13 TB-65A)	"SKF" DOUBLE ROWS WITHOUT WITH DRAWAL SLEEVE ROLLER BEARING No 23122C/C3	2514	295	215	115	110	35	550	95	98.5	34

SPHERICAL

ITEM	DESCRIPTION	MAKER'S NAME & No OF SPHERICAL ROLLER BEARING TYPE	YEAR PUT IN SERVICE	DIMENSIONS IN MM. A	B	C	D	E	F	G	H	REMARKS (จำนวนแห่ง)
1	B4. "CRAVENS"	"SKF" DOUBLE ROWS WITHOUT WITH DRAWAL SLEEVE ROLLER BEARING No 22324C/C3	2510	301	—	100	130	—	530	—	—	8
2	2 BOGIES, I.C.F. "INDIA"	"SKF" DOUBLE ROWS WITHOUT WITH DRAWAL SLEEVE ROLLER BEARING No 23222C/C3	2510	343	—	115	140	—	500	—	—	2
3	45 BOGIES, I.C.F. "INDIA"	"SKF" DOUBLE ROWS WITHOUT WITH DRAWAL SLEEVE ROLLER BEARING No 22322C/C3	2513	343	—	115	140	—	500	—	—	45

PART NO.	DESCRIPTION	MATERIAL	QUANTITY		
1	BRACKET-BODY BEARING	[illegible]	[illegible]		
2	END CAP	[illegible]	[illegible]		
3	BACKING RING	S40C	1		
4	SEAL WEAR RING	S40C	2		
5	LOCKING PLATE	SPCC	1		
6	CAP SCREW	S35C	3		
7	GREASE NIPPLE	ASS'Y	1		
8	GREASE NIPPLE CAP	POLY ETHYLENE	1		
9	VENT	ASS'Y	1		
10	HOUSING	SC46	1		
11	RUBBER	ASS'Y	2		
①	FL. WASHER	SS41	4		

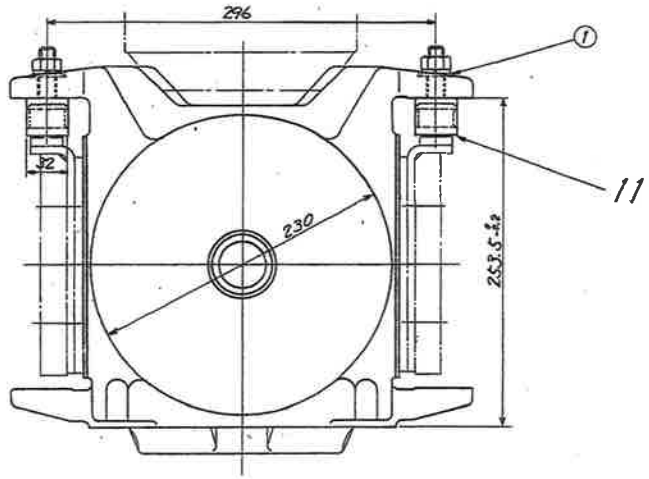

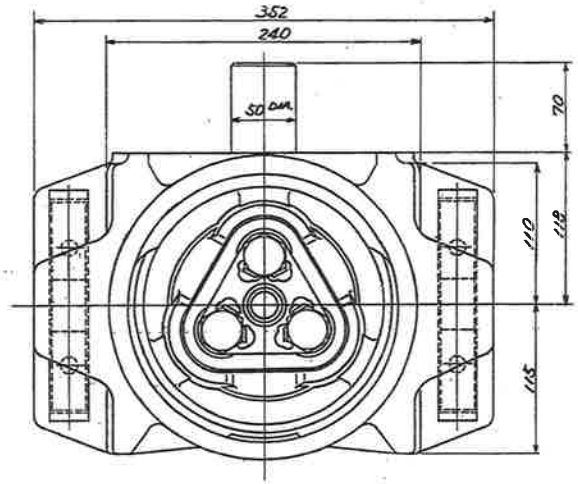

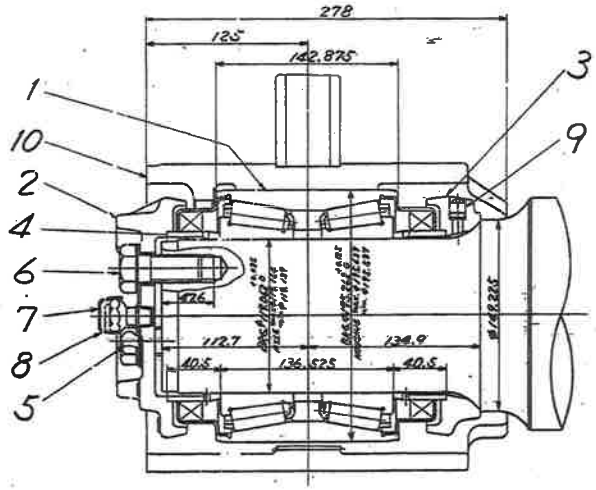

FOR DESIGN ONLY

แผนผังฉบับนี้
ได้รับการเห็นชอบให้ใช้การได้
ว.ส.พ.
22 / [illegible] / 81

R. S. R.	JOURNAL BOX ASSEMBLY	SCALE: 1/2
USED FOR: BNS 1101-1121	REF. DWG. NO.	
REMARKS: CONTRACT NO. [illegible] CONTRACT DATE [illegible]		
OWNER: KHARKIV HEAVY INDUSTRIES, LTD. NIPPON SHARYO, LTD.		DATE
DR.	CK.	1-9BNS2-002

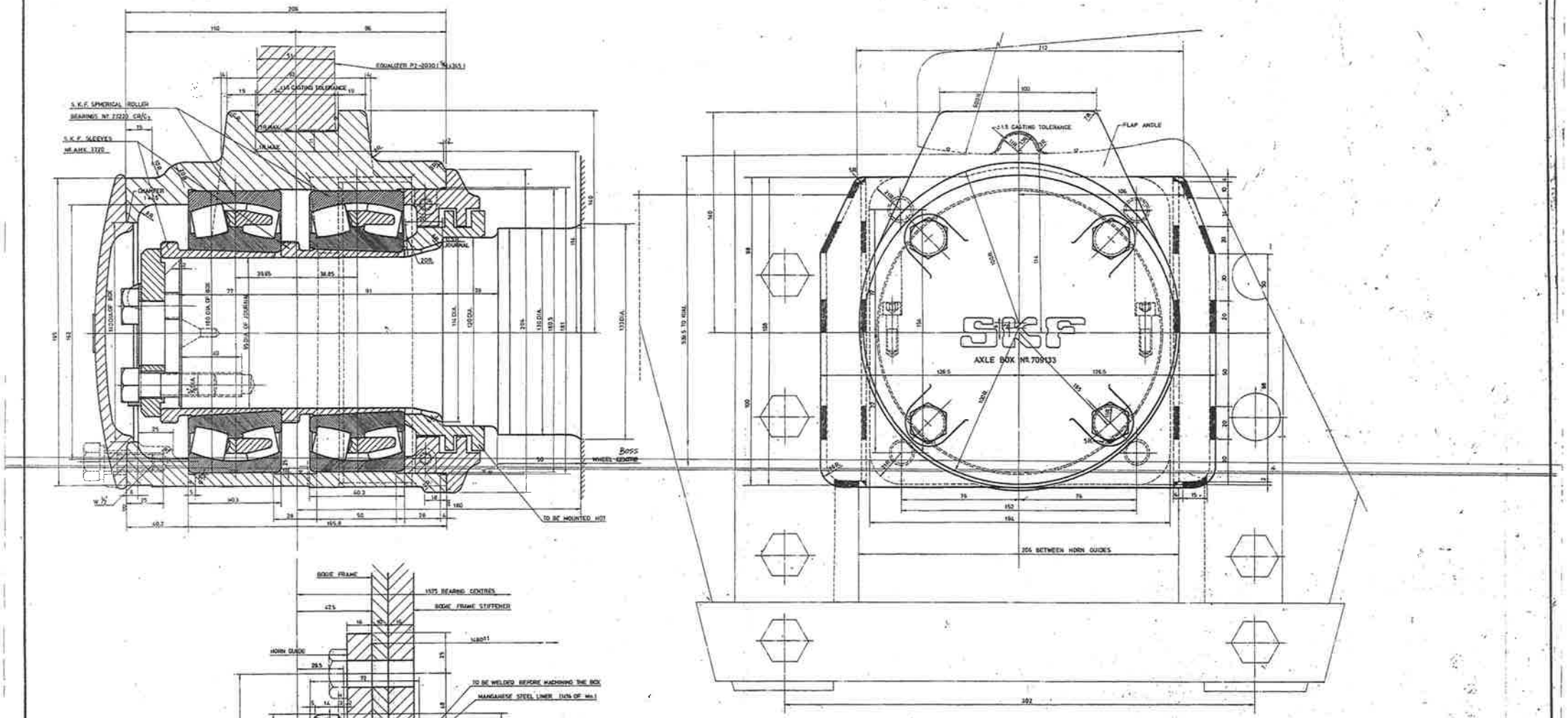

VIEW FROM END OF JOURNAL
1:1

	AXLE BOX ASSEMBLY	4	CAST STEEL	45 KG/MM.² MIN. 15 %	
MARKS	NAME OF PARTS	No.	MATERIALS	TENSILE STRENGTH & ELONGATION	REMARKS
▽ = ROUGH MACHINED		▽▽ = FINISHED MACHINED		▽▽▽ = FINE FINISHED MACHINED	

R. S. R.

AXLE BOX ASSEMBLY
(FOR S.K.F. ROLLER BEARING)

SCALE 1:1
DIMENSIONS IN MM.

USED FOR	REF. DWG. NO.
PASSENGER CARRIAGES. B.N.F Nº 16–24 B.N.S Nº 17–25 B.E.S. Nº 26–32 B.E.C Nº 10–17	5PD1–2001

REMARKS:-
เหมือน B.N.F. 16–24 (รถโดยสารชั้นที่ 3 พ.ศ. 2484)

DRAWN 2/2/44 CKI
APP. 2/2/44 KEN
APP. 2/2/44 SEN
APP. 2/2/44 SEN
CLASS 2/2/44 F.N.E.

DATE 23-6-20

P2 – 2192

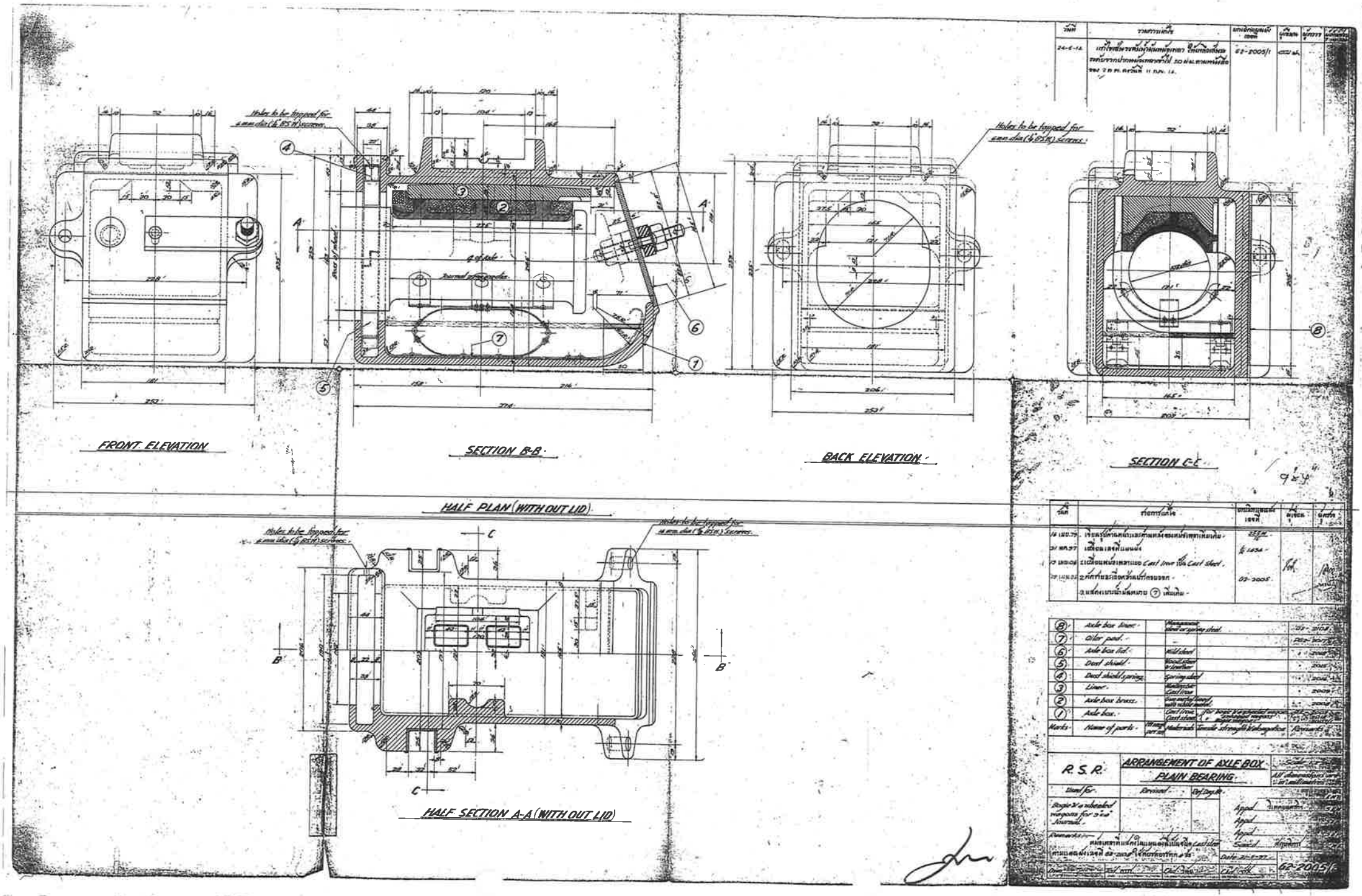
Holes to be tapped for 6 mm dia (1/4 BSW) screws.
FRONT ELEVATION
SECTION B-B
BACK ELEVATION
SECTION C-C
HALF PLAN (WITH OUT LID)
HALF SECTION A-A (WITH OUT LID)
R. S. R.
ARRANGEMENT OF AXLE BOX
PLAIN BEARING.
Axle box lower.
Oiler pad.
Axle box lid.
Dust shield.
Dust shield spring.
Liner.
Axle box brass.
Axle box.
Marks.
Name of parts.
Remarks.
62-2005/1

วันที่	รายการแก้ไข	เลขที่แบบพิมพ์เขียว	ผู้เขียน	ผู้ตรวจ	ผู้อนุมัติ
29/8/93	[illegible] AAR.M126 GRADE B [illegible] SF45A [illegible]	1-4TG2-002	[illegible]	[illegible]	[illegible]

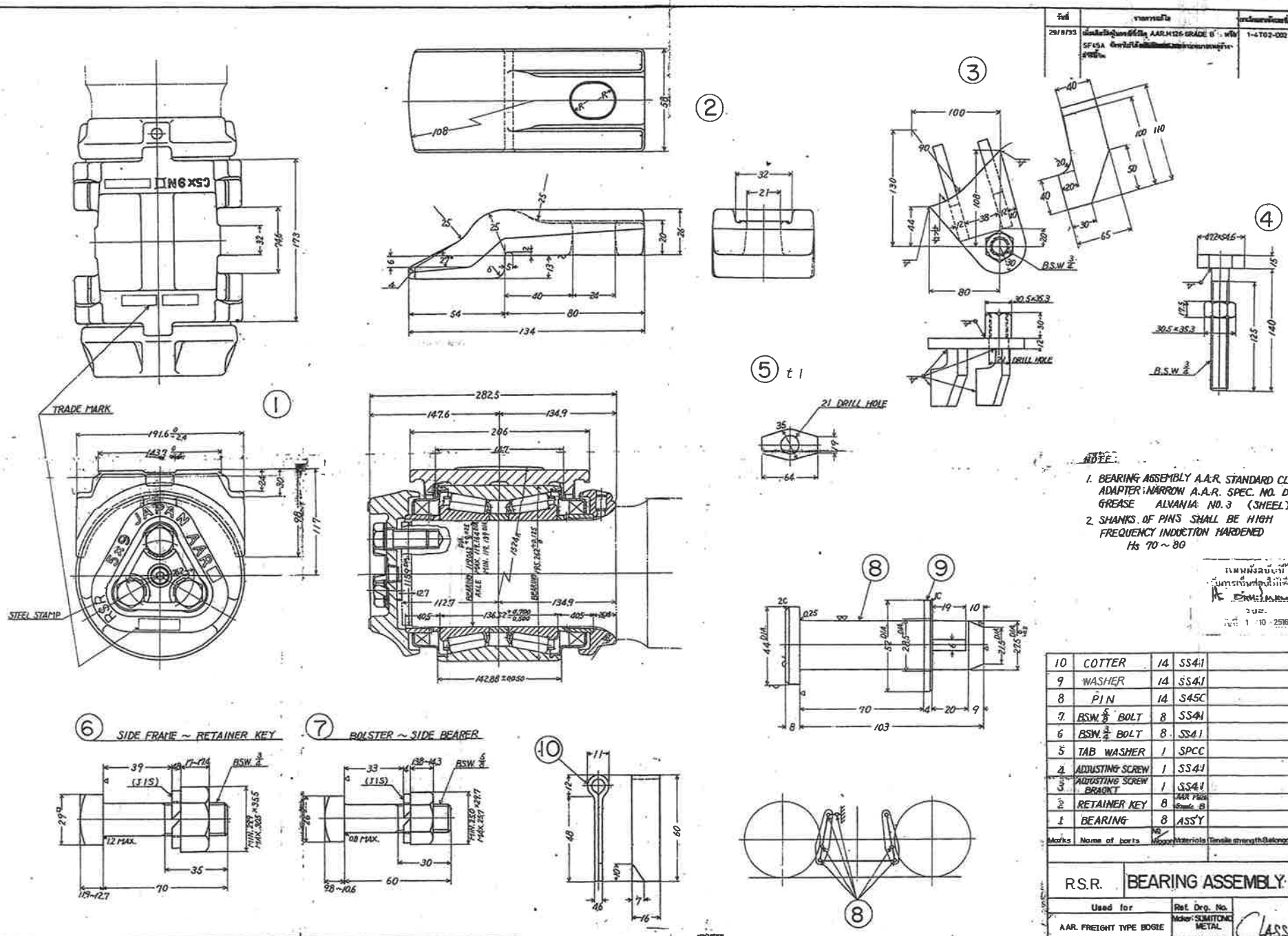

NOTE:

1. BEARING ASSEMBLY A.A.R. STANDARD CLASS C (5"x9")
   ADAPTER : NARROW A.A.R. SPEC. NO. D-24C
   GREASE ALVANIA NO. 3 (SHEEL)
2. SHANKS OF PINS SHALL BE HIGH FREQUENCY INDUCTION HARDENED
   Hs 70 ~ 80

Marks	Name of parts	No. Wagon	Materials	Tensile strength	Elongation	Remarks
10	COTTER	14	SS41			
9	WASHER	14	SS41			
8	PIN	14	S45C			
7	BSW. 5/8 BOLT	8	SS41			
6	BSW. 3/4 BOLT	8	SS41			
5	TAB WASHER	1	SPCC			
4	ADJUSTING SCREW	1	SS41			
3	ADJUSTING SCREW BRACKT	1	SS41			
2	RETAINER KEY	8	MAX Plate Grade B			
1	BEARING	8	ASS'Y			

R.S.R. BEARING ASSEMBLY

Scale: 1:1, 1:2
Dimensions in mm

Used for: AAR. FREIGHT TYPE BOGIE 12 M.TONS AXLE LOAD

Ref. Drg. No.

Maker: SUMITOMO METAL
Order No. 3105

CLASS "C"

Sanad

Remarks: [illegible]

Date

1-4TG2-002/1

REVISIONS

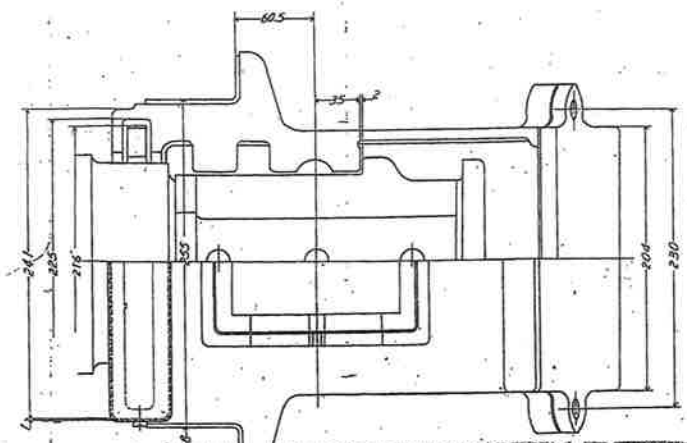

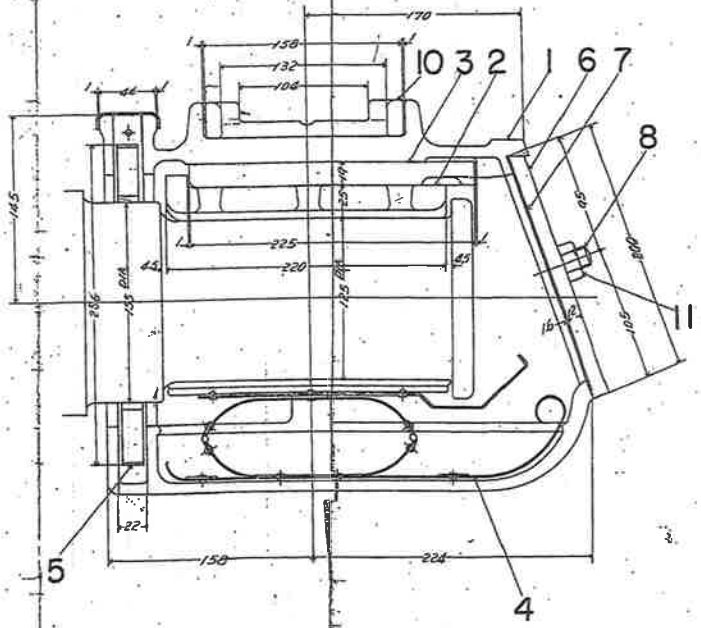

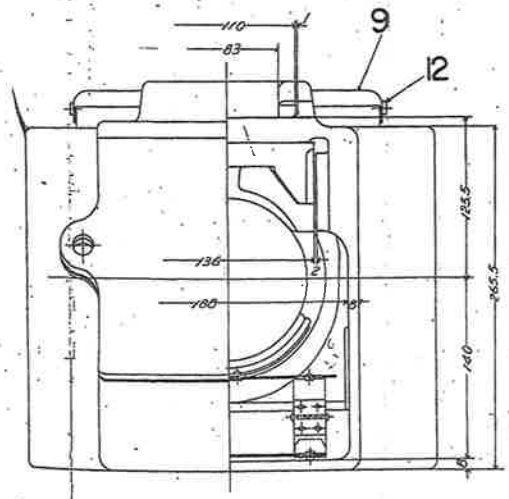

Marks	Name of parts	No/ unit	Material	Tensile strength & elongation	Dwg. No.	Remarks
(12)	Cylindrical bush HEAVY washer screw	2	mild steel	dia. 20%/mm min. 20%		
(11)	W/e block hexagon nut	8	mild steel	dia. 20%/mm min. 20%		
(10)	Spring seat	4		1-24Ga2-019		-019
(9)	Dust shield cover	4		1-24Ga2-017		-017
(8)	Bolt	8		1-24Ga2-016		-016
(7)	Packing	4		1-24Ga2-015		-015
(6)	Axle box lid	4		1-24Ga2-014		-014
(5)	Dust shield	4		1-24Ga2-013		-013
(4)	Oil pad	4		1-24Ga2-012		-012
(3)	Liner	4		1-24Ga2-011		-011
(2)	Brass bearing	4		1-24Ga2-010		-010
(1)	Axle box	4		1-24Ga2-000		-000

STATE RAILWAY OF THAILAND

ARRANGEMENT OF AXLE BOX

Used for	Revised	Remarks	Scales 1:2
CG-No. 1512.01-1512.40		Modification from FHK 2003	All dimensions are in mm.
			Date 17-9-68

Tel. | Chd. | Ex. Sign. Chd. | Ex. Sign. Sect.

MAKERS: FUJI HEAVY INDUSTRIES LTD. / HITACHI. LTD. / KISHA SEIZO KAISHA. LTD.

DRG.NO. 1-24Ga2-002

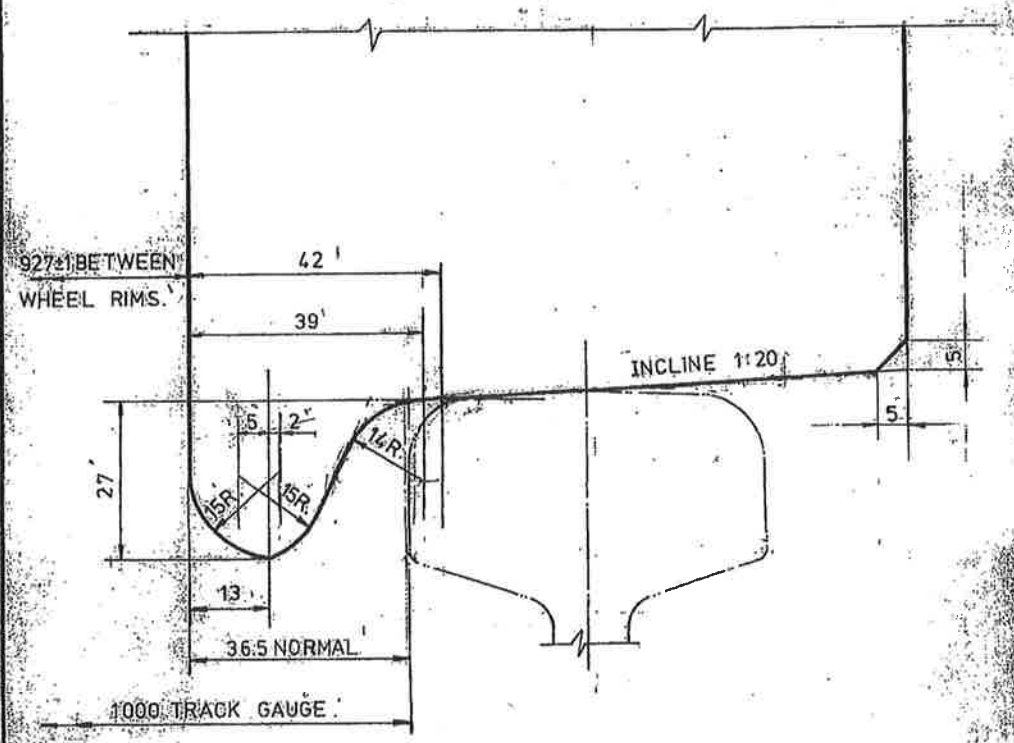

R. S. R.	WHEEL TYRE CONTOUR.- (VIDURA CONTOUR)	SCALE. 1:1 DIMENSIONS IN MM.
USED FOR.	REF. DWG. No.	
No. 2 & 5 WHEELS LOCO. No. 571–585		E.M.
REMARKS. ใช้เป็นแม่แบบตรวจสอบ SO1-2014/2 ITEM1		SANCD. S.E.M.
DR.	CH.	CH. DATE. 7-11-17 MM2 - 2036

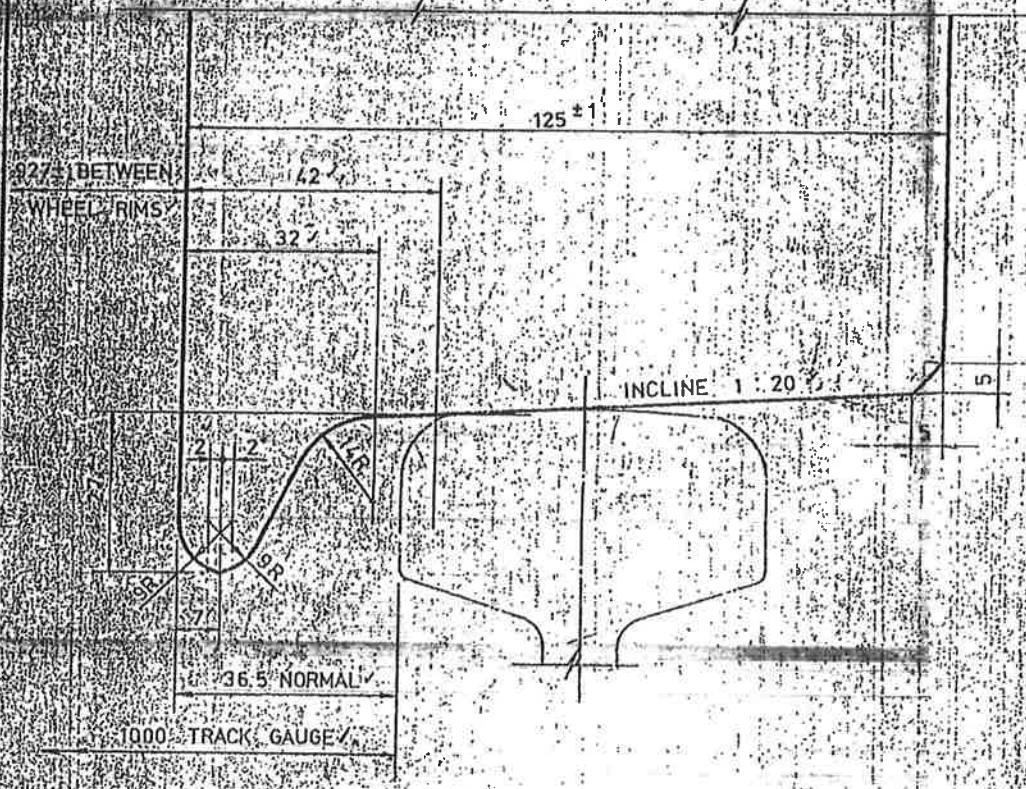

R. S. R.	WHEEL TYRE CONTOUR	SCALE DIMENSIONS IN MM
USED FOR No. 2 & 5 WHEELS LOCO. No. 4101 – 4154	REF. DWG. No.	EMT
REMARKS โปรไฟล์ล้อแทนผ่านเดิม TR. 7024882 ของ ALSTHOM	SANCD.	SEM
DR. CH. CH.	DATE 3-1-18	MM2 – 2037

A3

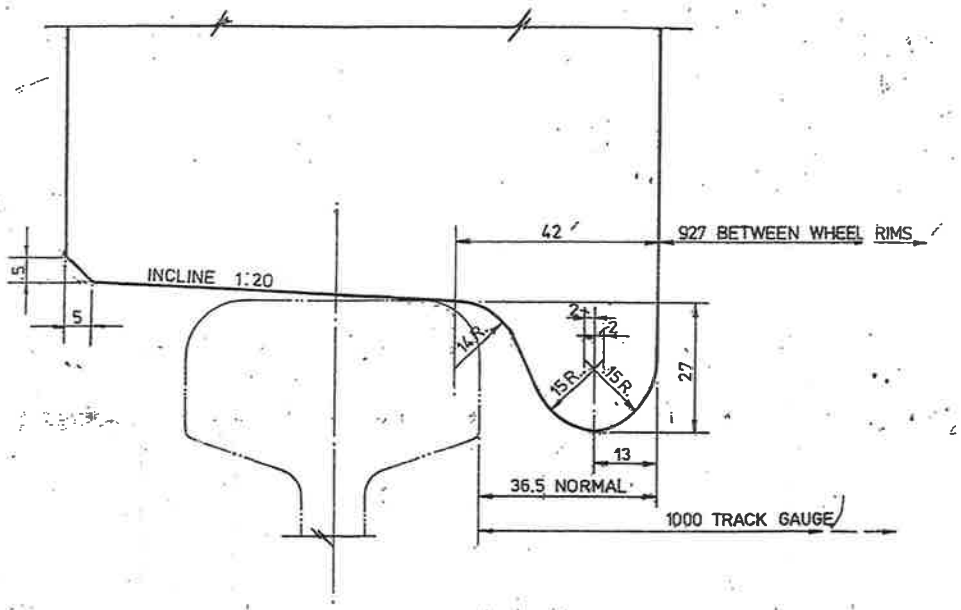

ลอกจากต้นฉบับเดิมซึ่งชำรุดและได้ตรวจสอบถูกต้องแล้ว

ผู้ลอก ช่างจัดวา

ผู้ตรวจ ผช.

10/11/26

R.S.R.	WHEEL TYRE CONTOUR (VIDURA CONTOUR)	SCALE: 1:1 DIMENSIONS IN MM.

USED FOR	REF. DWG. №
LOCOMOTIVE, PASSENGER CAR & FREIGHT CAR	

REMARKS:

DR. ประจวบ CH. เจริญ CH. เติบ เศรฐบุตร

ลหทัย โตษะนันทน์ EMT.

APP. ลหทัย โตษะนันทน์ SEM.

SANCD. อาชว์ กุญชร ณ อยุธยา CME.

DATE 15-3-2525

MM2-2029

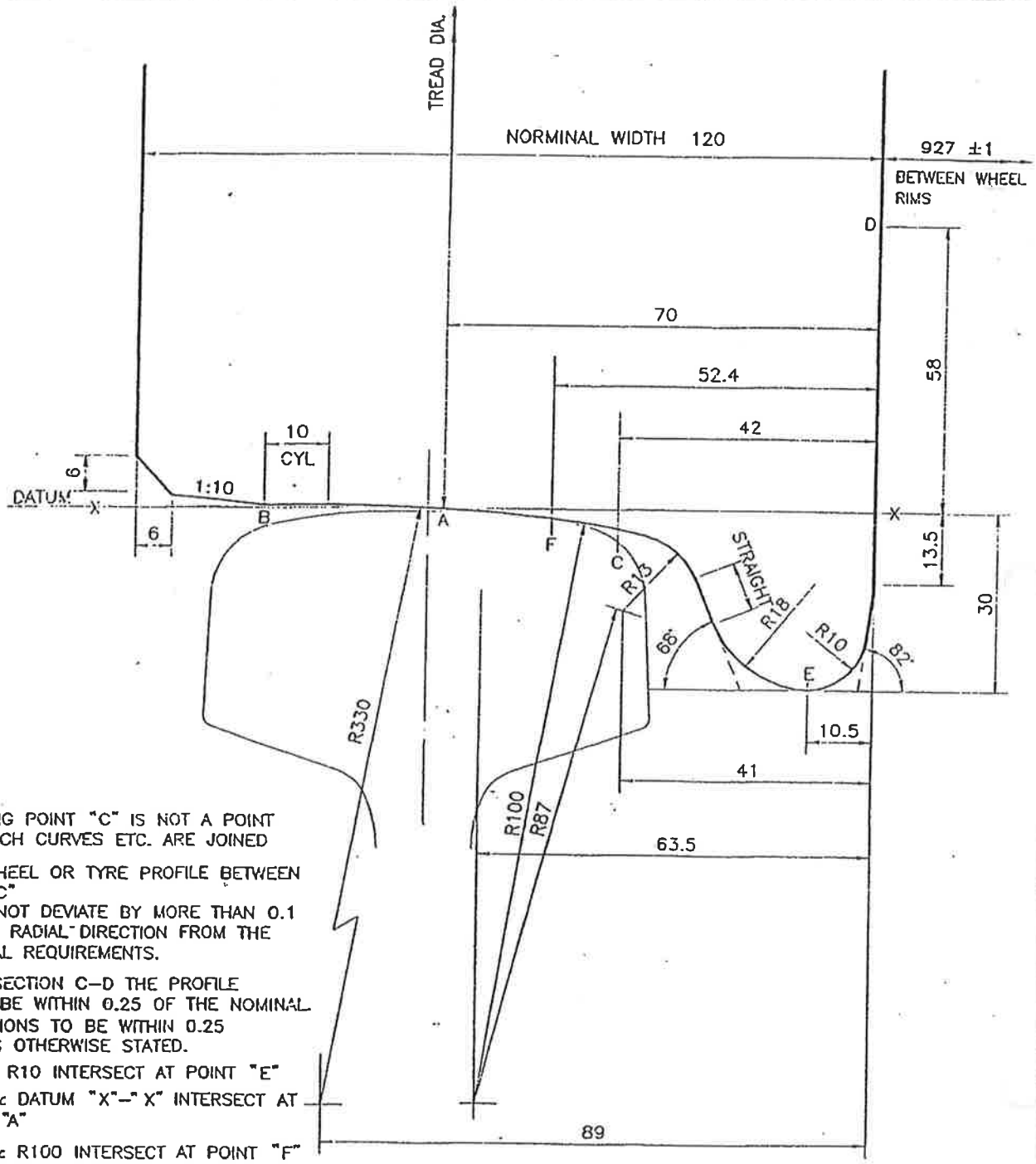

NOTES:

GUAGING POINT "C" IS NOT A POINT AT WHICH CURVES ETC. ARE JOINED

THE WHEEL OR TYRE PROFILE BETWEEN "B"&"C" MUST NOT DEVIATE BY MORE THAN 0.1 IN THE RADIAL DIRECTION FROM THE NOMINAL REQUIREMENTS.

OVER SECTION C–D THE PROFILE SHALL BE WITHIN 0.25 OF THE NOMINAL. DIMENSIONS TO BE WITHIN 0.25 UNLESS OTHERWISE STATED.

R18 & R10 INTERSECT AT POINT "E"

R330 & DATUM "X"–"X" INTERSECT AT POINT "A"

R330 & R100 INTERSECT AT POINT "F"

SRT.	P8 WHEEL CONTOUR	SCALES: 1:1 DIMENSIONS IN MM.
USED FOR	REF. DWG. NO.	APP. _____ EMT.
E & O PASSENGER CAR	F–A2–B	SANCO. _____ SEM.
REMARKS: THIS DRAWING SUPERSEDES F–A–2–B		DATE 13/12/45
DR. S.wut	CH. _____ CH. _____	MM2 – P8

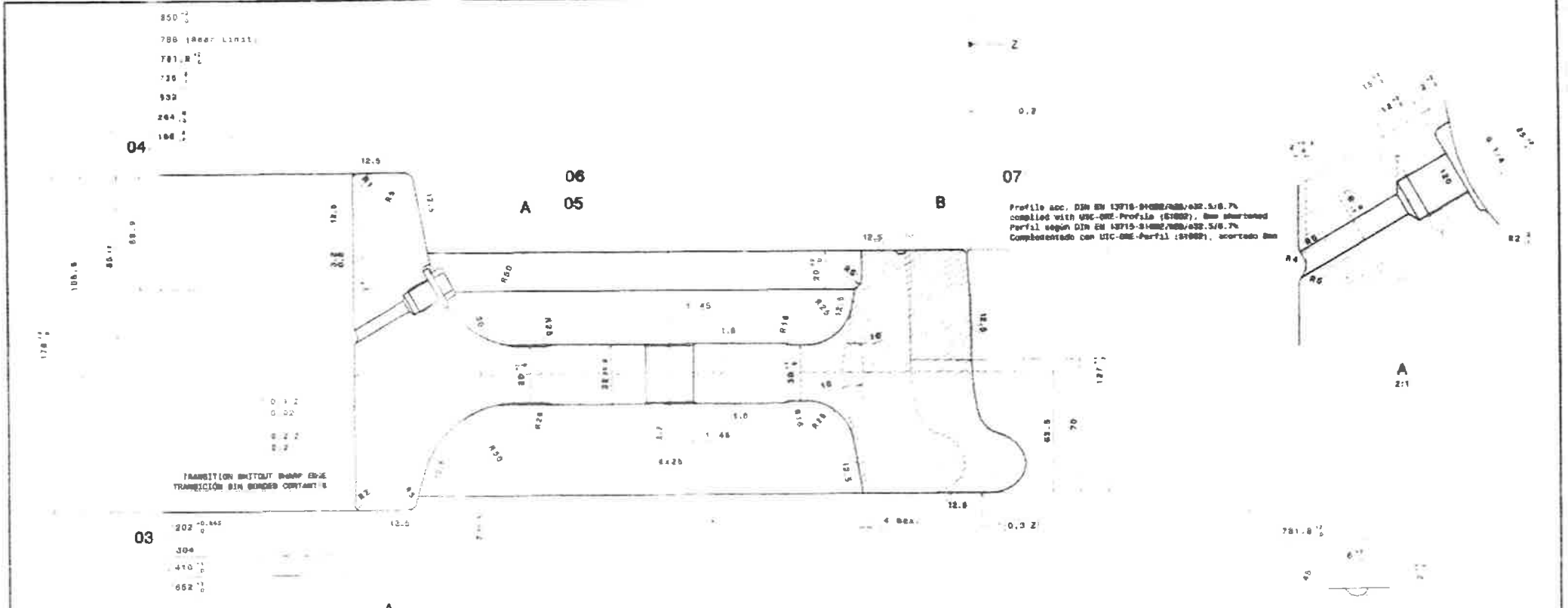

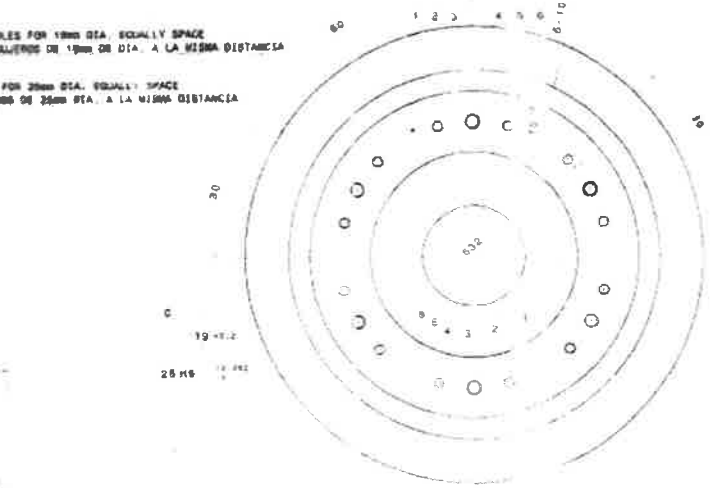

MARKING ORDER ON THE RIM

1.GRADE OF MATERIAL(CODE 77 FOR R77,BY-R87,BE-R88)
2.MANUFACTURES CODE(20)
3.LAST TWO FIGURES OF YEAR OF MANUFACTURE
4.CAST NUMBER
5.ULTRASONIC CODE
6.INSPECTORS STAMP

MARCAS EN LA LLANTA

1.GRADO DEL MATERIAL(CODIGO 77 PARA R77,BY-R87,BE-R88)
2.CÓDIGO DEL FABRICANTE (20)
3.ULTIMAS DOS CIFRAS DEL AÑO DE LA FABRICACIÓN
4.NUMERO DE FUNDICIÓN
5.CODIGO DE ULTRASONIDOS
6.SELLO DE VERIFICACIÓN

ON THE HUB (ONLY FOR ASSEMBLY BRANDING)

1.ORIGINAL ASSEMBLING CONTRACTORS CODE(20)
2.CAST NUMBER/AXLE SERIAL NUMBER
3.WHEEL POSITION(AXLE GEOMETRY CODE)
4.TYPE PROFILE(S1002)
5.MONTH AND LAST TWO FIGURES OF YEAR OF ASSEMBLY OF WHEELSET
6.INSPECTOR'S STAMP

EN EL CUBO DEL EJE(SOLO MARCAS DE ENSAMBLAJE)

1.CODIGO DEL CONJUNTO ORIGINAL(20)
2.NUMERO DE COLADA/NUMERO DE SERIE DEL EJE
3.POSICIÓN LIBRE(CODIGO DE GEOMETRIA DEL EJE)
4.TIPO DE PERFIL(S1002)
5.MES Y ULTIMAS DOS CIFRAS DEL AÑO DEL MTJE. DE EJE MONTADO
6.SELLO DE VERIFICACIÓN

NOTES:

1.IT IS PREFERRED THAT THE BRANDING ON THE RIM IS LOCATED ON THE SAME RADIUS [illegible] AS THE SECTION PLUG AND BRANDING ON THE HUB IS DIAMETRICALLY OPPOSITE THE BRANDING IN THE
2.COLD BRANDING TO DEPTH MIN.0.4mm
3.BRANDING ACCORDING TO GM/RT 2486-LATEST ISSUE.
4.POSITION AND VALUE OF RESIDUAL STATIC IMBALANCE ARE MARKED BY PAINT ON THE [illegible] FACE OF THE RIM

NOTAS:

1.ES PREFERIBLE QUE LA MARCA DE LA LLANTA ESTE LOCALIZADA EN LA MISMA LINEA [illegible] AL QUE LA UBICACIÓN DEL TAPON DEL ACEITE Y LA MARCA DEL CUBO ESTE DIAMETRALMENTE OPUESTA A LA MARCA DE LA LLANTA
2.MARCAR EN FRIO A UNA PROFUNDIDAD MINIMA 0.4mm
3.MARCAR DE ACUERDO A GM/RT 2486-ULTIMA EDICIÓN
4.POSICION Y VALOR DEL DESEQUILIBRIO ESTATICO RESIDUAL SON MARCADOS EN PINTURA EN LA CARA INTERNA DE LA LLANTA

D 7	PROFILE / PERFIL	1	1	[illegible]	[illegible]
D 6	WHEELS 8 EXT.17.8 13 INTER. / RUEDAS 8 EXT.17.8 13 INTER.	1	1	[illegible]	[illegible]
D 5	PLUG 1/4" BSP / TAPON 1/4" BSP	1	1	[illegible]	[illegible]
D 4	SEMI-FINISHED WHEEL / RUEDA SEMIACABADA	1		[illegible]	[illegible]
D 3	FINISHED WHEEL / RUEDA ACABADA	1		[illegible]	[illegible]
D 2	SEMI-FINISHED WHEEL ASSEMBLY / CONJUNTO RUEDA SEMIACABADA	1	1		[illegible]
D 1	FINISHED WHEEL ASSEMBLY / CONJUNTO RUEDA ACABADA	1	1		[illegible]

A
B
C

TAILANDIA

RUEDA Ø850
Ø850 WHEEL

CAF DEASAIN

X.03.01284

A1

C

A3

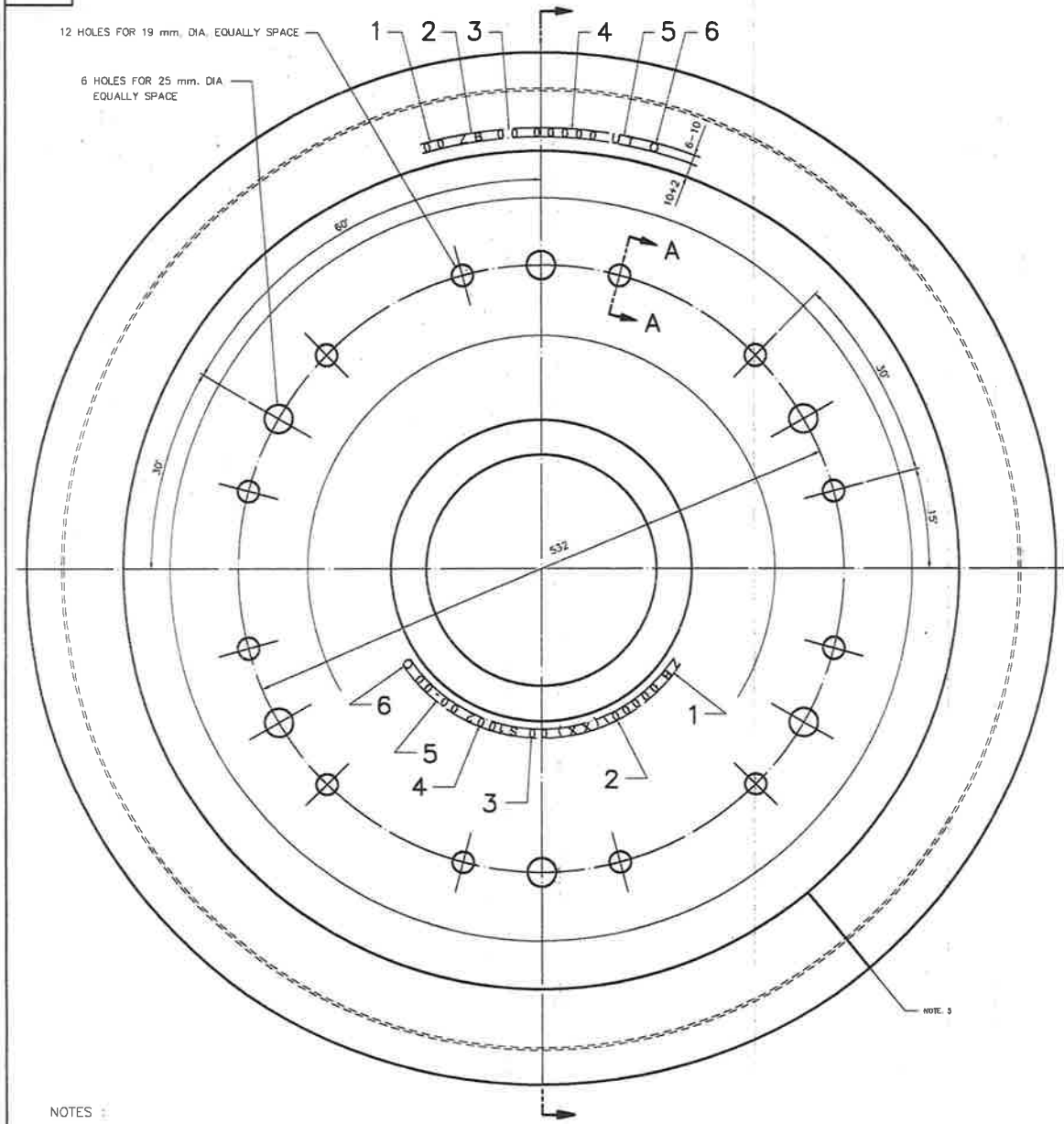

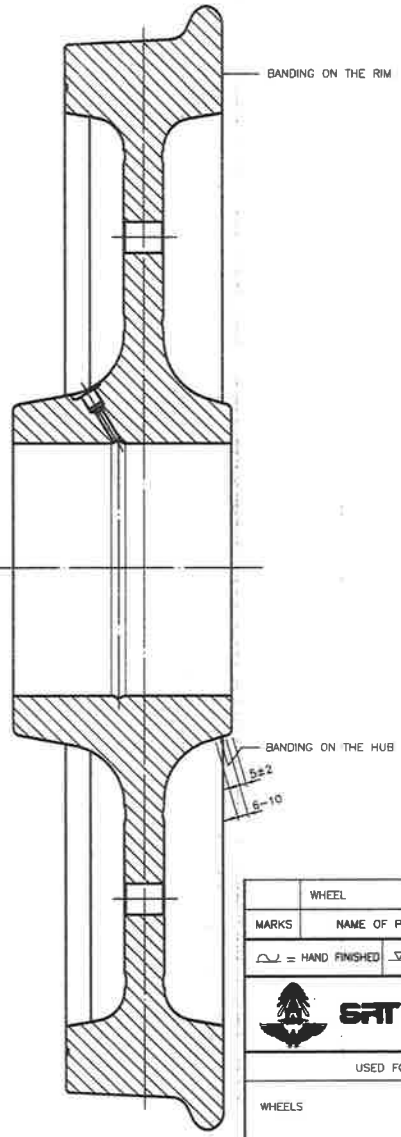

SECTION A–A
2:1

MARKING ORDER ON THE RIM

1. GRADE OF MATERIAL (CODE 7T FOR R7T, 8T–R8T, 8E–R8E)
2. MANUFACTURERS CODE (ZB)
3. LAST TWO FIGURES OF YEAR OF MANUFACTURE
4. CAST NUMBER
5. ULTRASONIC CODE
6. INSPECTORS STAMP

ONTHE HUB (ONLY FOR ASSEMBLY BRANDING)

1. ORIGINAL ASSEMBLING CONTRACTORS CODE (ZB)
2. CAST NUMBER / AXLE SERIAL NUMBER
3. FREE POSITION (AXLE GEOMETRY CODE)
4. TYPE PROFILE (S1002)
5. MONTH AND LAST TWO FIGURES OF YEAR OF ASSEMBLY OF WHEELSET
6. INSPECTOR'S STAMP

NOTES :

1. IT IS PREFERRED THAT THE BRANDING ON THE RIM IS LOCATED ON THE SAME RADIAL LINE AS THE OIL SECTION PLUG AND BRANDING ON THE HUB IS DIAMETRICALLY OPPOSITE THE BRANDING ON THE RIM.
2. COLD BRANDING TO DEPTH MIN. 0.4 mm.
3. BRANDING ACCORDING TO GM/RT 2466–LATEST ISSUE.
4. POSITION AND VALUE OF RESIDUAL STATIC IMBALANCE ARE MARKED BY PAINT ON INNER FACE OF THE RIM.

	WHEEL	8			SEE MARKING ORDER
MARKS	NAME OF PARTS	No./CAR	MATERIALS	TENSILE STRENGTH&ELONGATION	REMARKS
⌒ = HAND FINISHED	▽ = ROUGH MACHINED	▽▽ = FINISHED MACHINED	▽▽▽ = FINE FINISHED MACHINED	○ = GROUND SURFACE	

SAT

BRANDING OF SOLID WHEEL

SCALES :1:1,1:2,1:3

DIMENSIONS IN mm

USED FOR	REF. DWG. No.
WHEELS	

REMARKS:
เขียนขึ้นจากแผนผังของบริษัท

APP. _____ EMT.

SANCD. _____ SEM.

DATE xx/xx/xx

DR. _____ CH. _____ CH. _____

A3

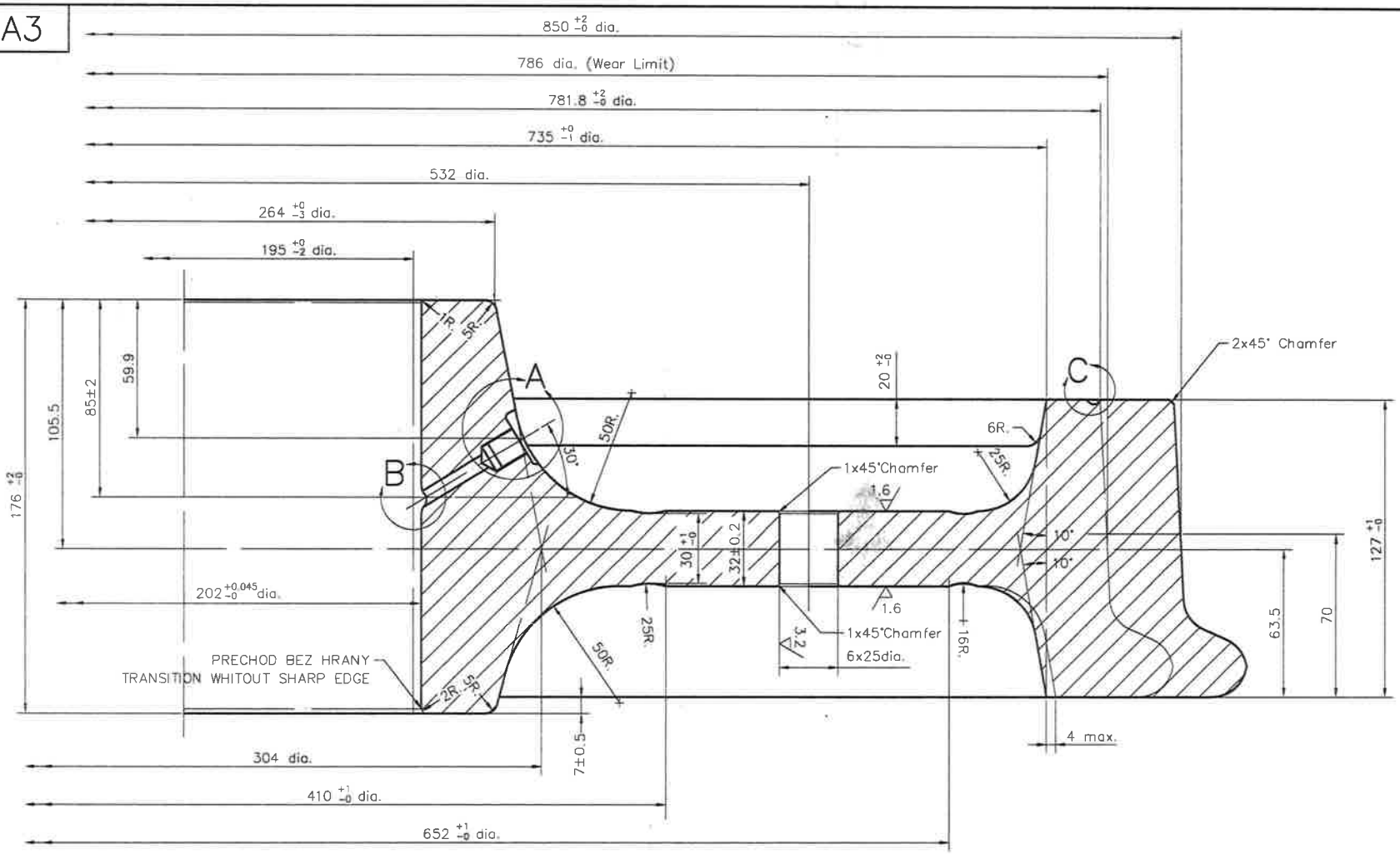

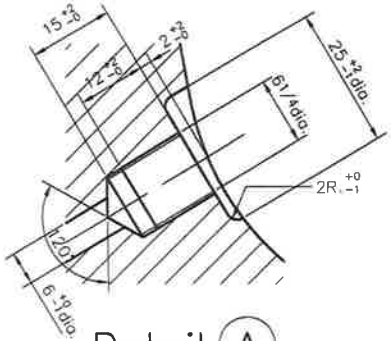

Detail (A)
1:1

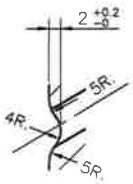

Detail (B)
1:1

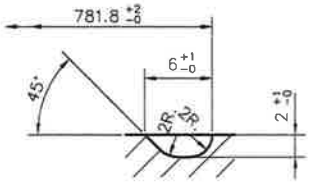

Detail (C)
2:1

SRT

SOLID WHEEL

SCALES: 1:1 ,1:2 ,2:1

DIMENSIONS IN mm

USED FOR	REF. DWG. No.

REMARKS:

DR. ---------- CH. ---------- CH. ----------

APP. ---------- EMT.

SANCD. ---------- SEM.

DATE

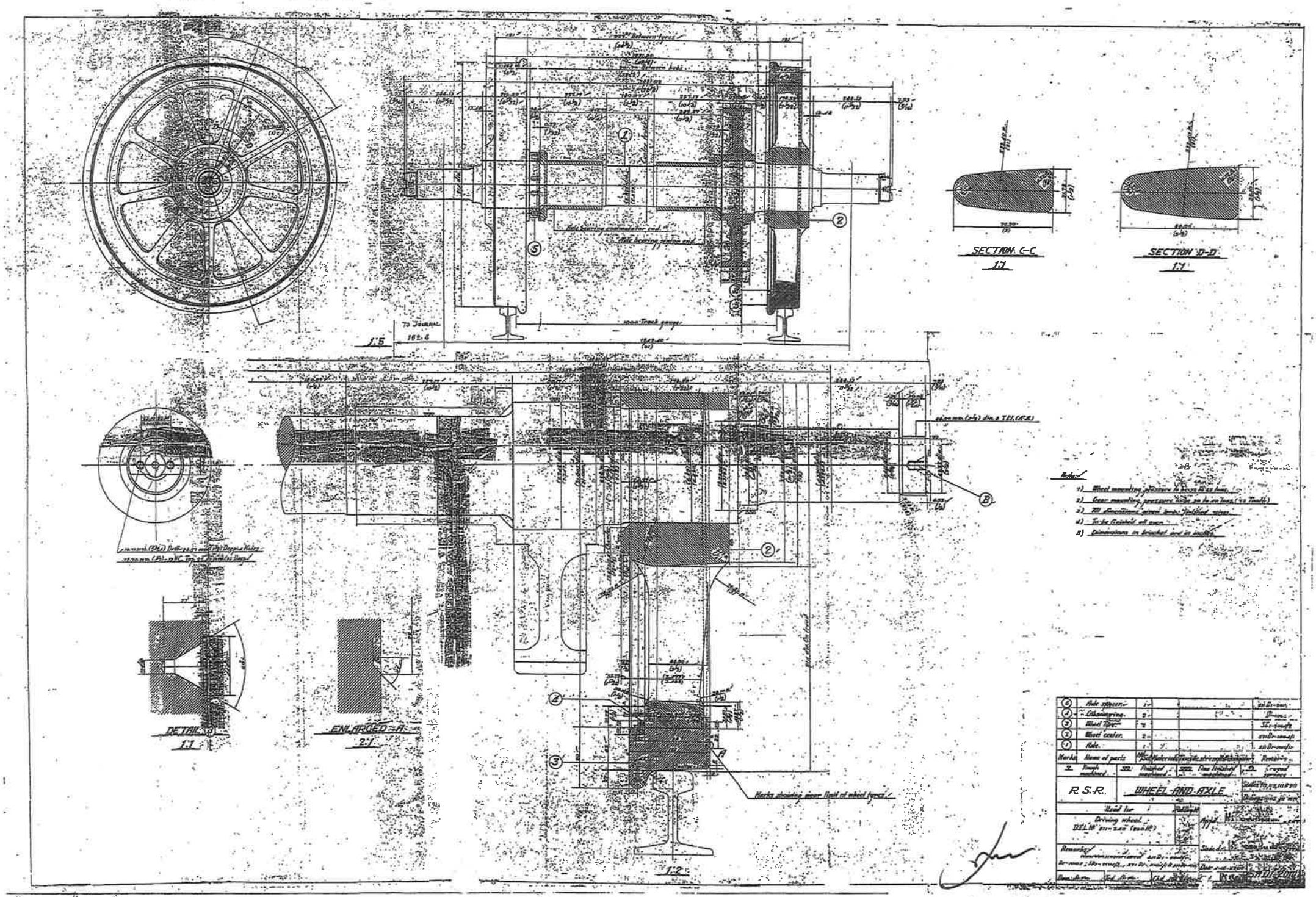
1:5
SECTION C-C
1:1
SECTION D-D
1:1
DETAIL A
1:1
ENLARGED A
2:1
1:2
Marks showing over limit of wheel tyres
R.S.R.
WHEEL AND AXLE

A2

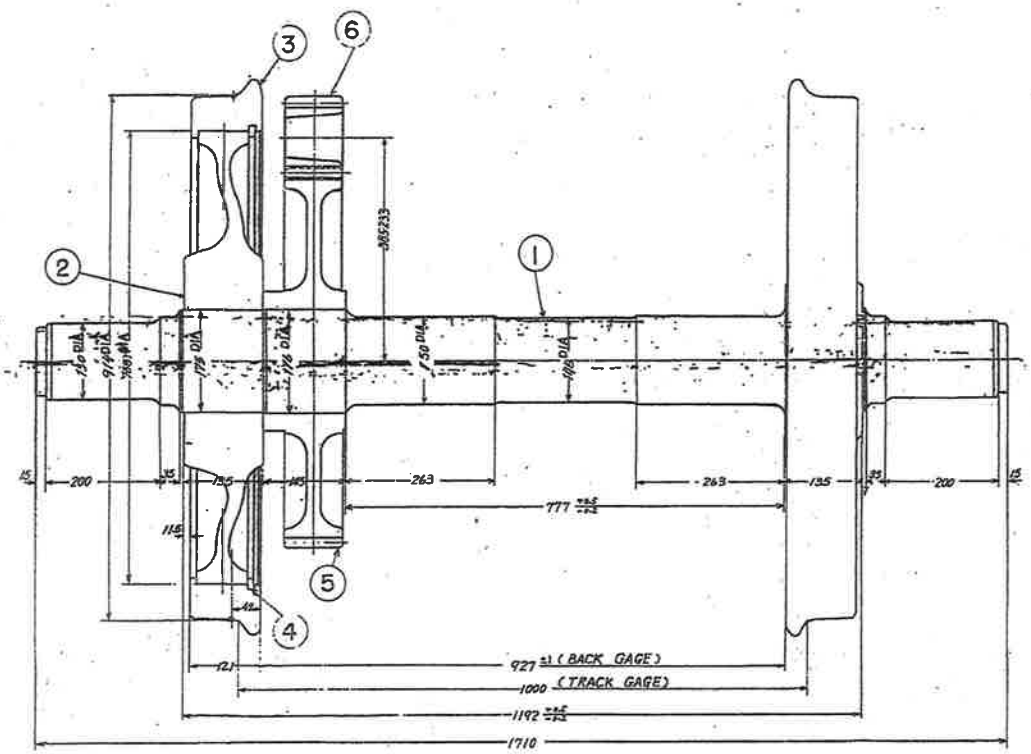

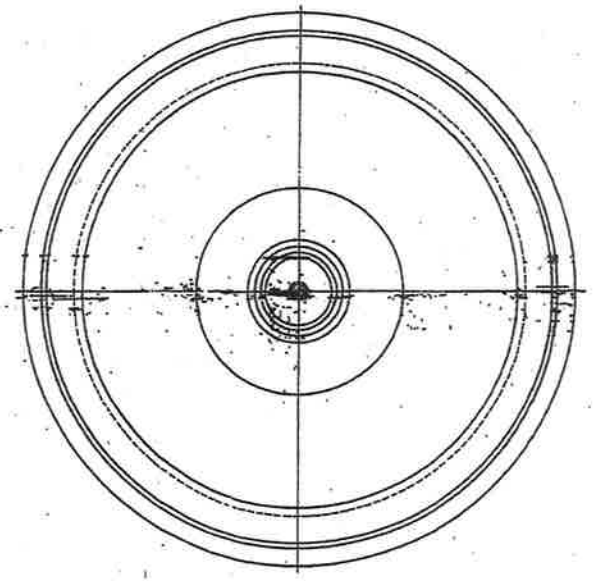

NOTE

1. WHEEL CONTING PRESSURE 80 — 82.5 tons
FOR NEW WHEELS AND 105—110 tons.

31/2/2511

No.					
6	PINION	1			[illegible]
5	GEAR	1			[illegible]
4	GIBSON RING	2			[illegible]
3	TYRE	2			[illegible]
2	WHEEL DISC	2			[illegible]
1	AXLE	1			[illegible]

[redacted]

SCALE 1/5	DRN		
	CHD		
	APPD		

Hitachi, Ltd.
Tokyo Japan

6HD1-1038/1
WHEEL AND AXLE

MITO WORKS DRG. NO. MB-390-[illegible]

STATE RAILWAY OF THAILAND

WHEELS AND AXLE

Used for	Revised	Remarks	Scale: 1:5
DEL No 611-615	—	[illegible] MB-390-000	All dimension are in mm.
			Date 22-2-00
Tcd [illegible]	Chd [illegible]	Chd [illegible]	Sanctioned [illegible]

6HD1-1038/1

NO	REVISIONS	DATE	SIGN

FIRED OR ROUGH FINISHED FINE FINISHED
[illegible] MACHINED MACHINED [illegible]

14-11-10	ได้แก้ไข WHEEL CENTER จาก SPOKE MODEL เป็น ROLLED DISC WHEEL ตามหนังสือ เลขที่ ศร.1438/10 วันที่ 17/11/2510 ศร.1/02/1/47 ลง 30/11/10	6HD1-1038		
วันที่	รายการแก้ไข	ผู้ตรวจแบบ เบื้องต้น	ผู้ตรวจ	ผู้อนุมัติ

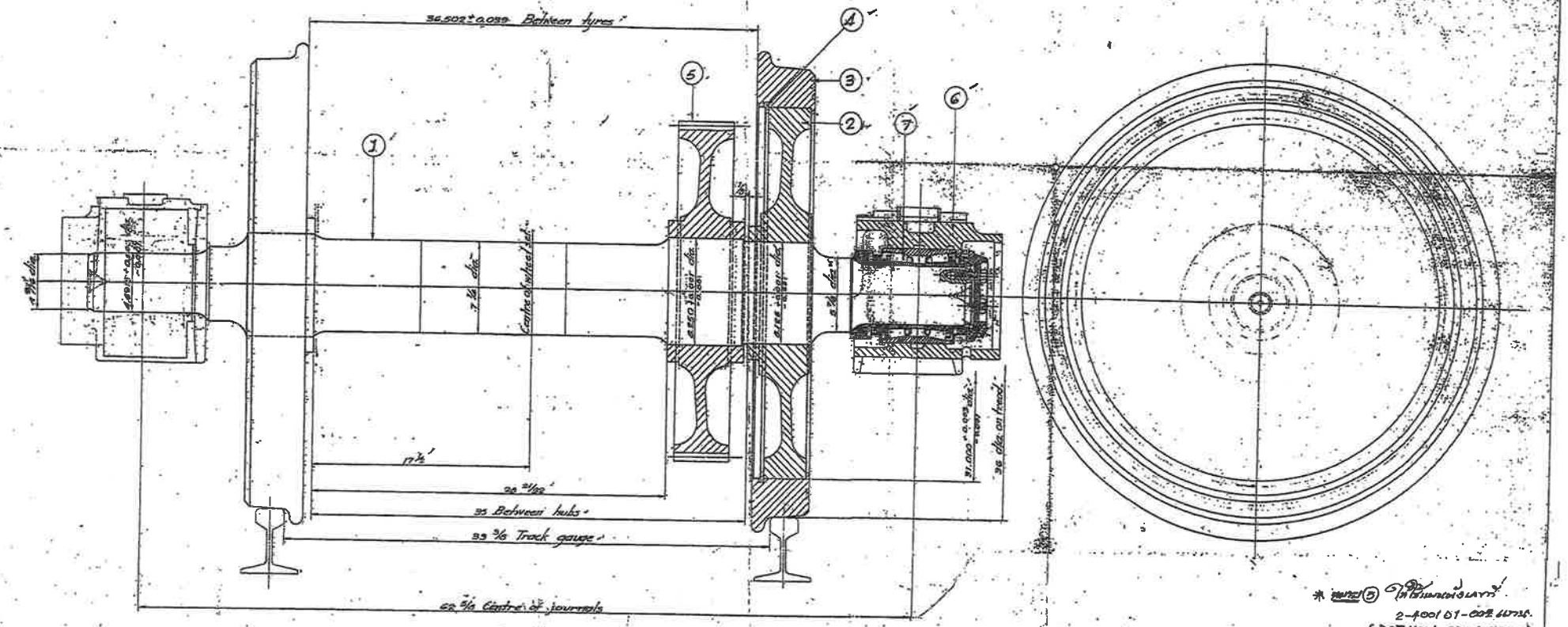

* marks (5) in drawing layout

2-4001 D1-002 drawing.

(DRIVING SPUR GEAR)

Marks	Name of parts	No.	Material	Tensile strength & elongation	Remarks
7	Axle roller bearing set	2			1-4001 D2-005
6	Axle box	2			1-4001 D2-008
5	Gear	1			1-4001 D2-002, 2-4001 D2-002
4	Tyre ring	2			D1-1002/1
3	Wheel tyre	2			SD1-2018/1
2	Wheel disc	2			1-4001 D1-002
1	Axle	1			4001 D1-1013/1

R. S. R.	DRIVING WHEEL SET & AXLE	Scale 1:5. Dimensions in inches
Used for	Ref. Drg. No.	
Driving wheels DEL. No. 4001–4050. (GE 1320 HP)	See table	
Remarks		Sanctd. Dy. Chief Mechanical Engr. 01 Oct 71-4001
Drn. Ch. Ch.	Date 20/7/00	1-4001 D1-002

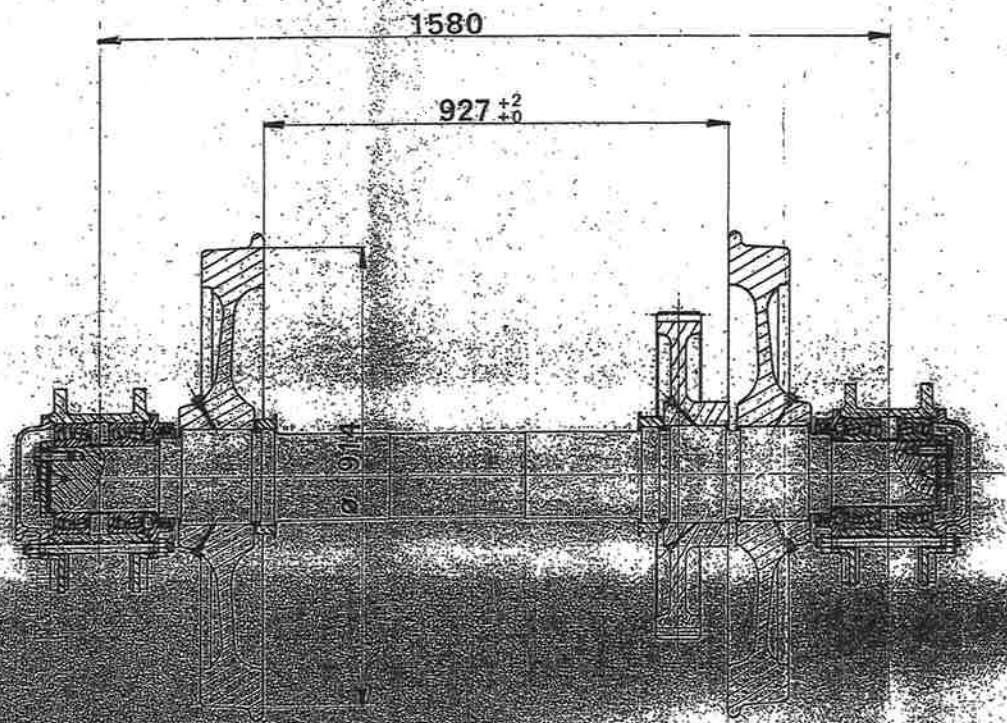

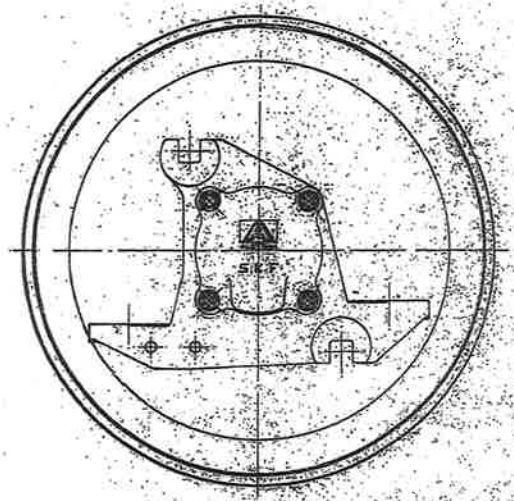

3 3 STANDARD AXLE WITH AXLE BOX

ALSTHOM

N° LN 4.58.3

TR 8 025132 A

MARKS	NAME OF PARTS	NO/SET	MATERIALS	TENSILE STRENGTHELONGATION	REMARKS
①	AXLE	1	SFA60A		JIS E 4502
②	WHEEL CENTER	2			[illegible]
③	WHEEL TYRE	2			[illegible]
④	GIBSON RING	2			BS24 PART6-1975 GRADE 622
⑤	GEAR	1	S55C	G 4051	JIS G 4501
⑥	PLUG	3	SS400		JIS G 3101
⑦	LOCK WASHER	3	SPCC		JIS G 3141

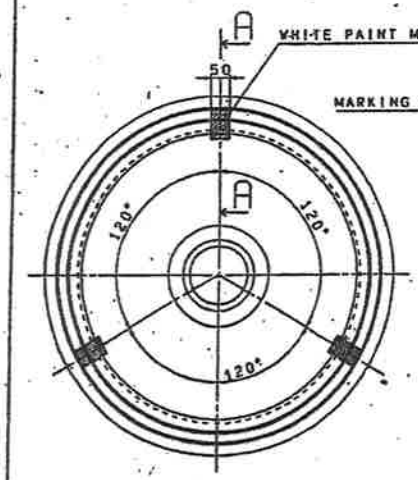

SECTION A-A

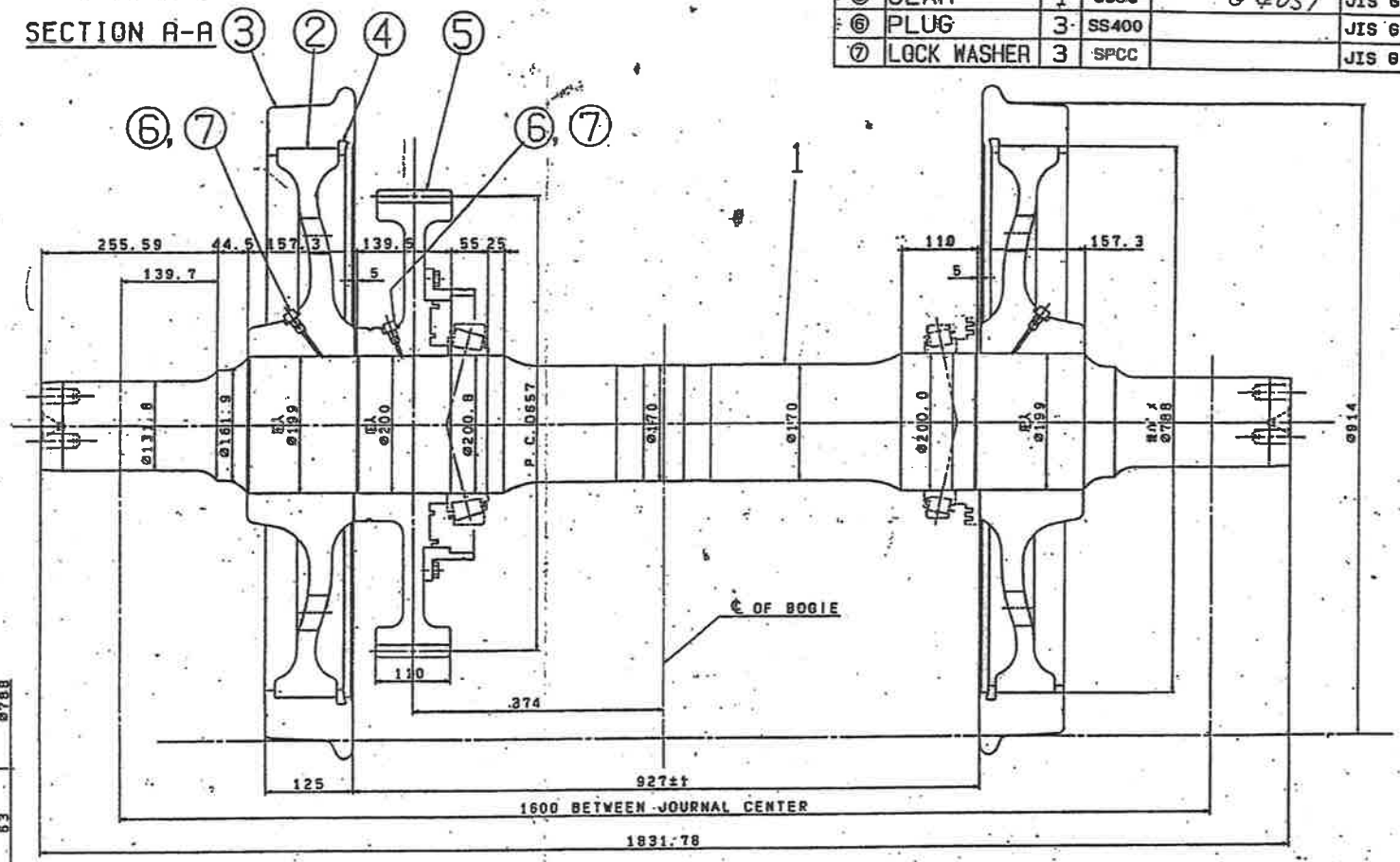

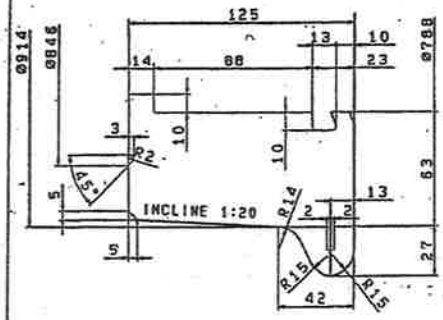

TREAD AND FLANGE CONTOUR

NOTE:
THE WHEELS AND GEAR ARE PRESSED ON AXLE.

DATE	AMENDED DESCRIPTION	REVISION	DRAWER	CHECK	APP.

KAWASAKI HEAVY INDUSTRIES, LTD. reserve all the rights of this document, including its contents, specifications, and information such as engineering data which is issued in confidence and shall not be copied, reproduced, used, filed for patent application, or disclosed, distributed, or sold to third parties without prior consent in us

H.FINISHED	ROUGH MACHINED	FINISHED MACHINED	FINE FINISHED MACHINED	GROUND SURFACE
R.S.R	WHEEL AND AXLE	SCALE 1/5, 1/2, 1/10	DIMENSIONS IN MM.
USED FOR	REF.DWG.NO		
DEL.No:4501-4522 (HTC)		APP.	
REMARKS		SANCD.	
		DATE	2L107230-3021

84D705067

GENERAL ELECTRIC 84D705067

CRITICAL TO QUALITY CHARACTERISTICS MARKED THUS ⊖	UNLESS OTHERWISE SPECIFIED USE THE FOLLOWING: APPLIED PRACTICES	SURFACES	TOLERANCE			
	41A282000	✓	±	±	±	

FCF 41X275957TL

TITLE WHEEL & AXLE MOUNTING

FOR USE MADE FOR THAILAND UM22C PO 2225

SEE SEPARATE PARTS LIST

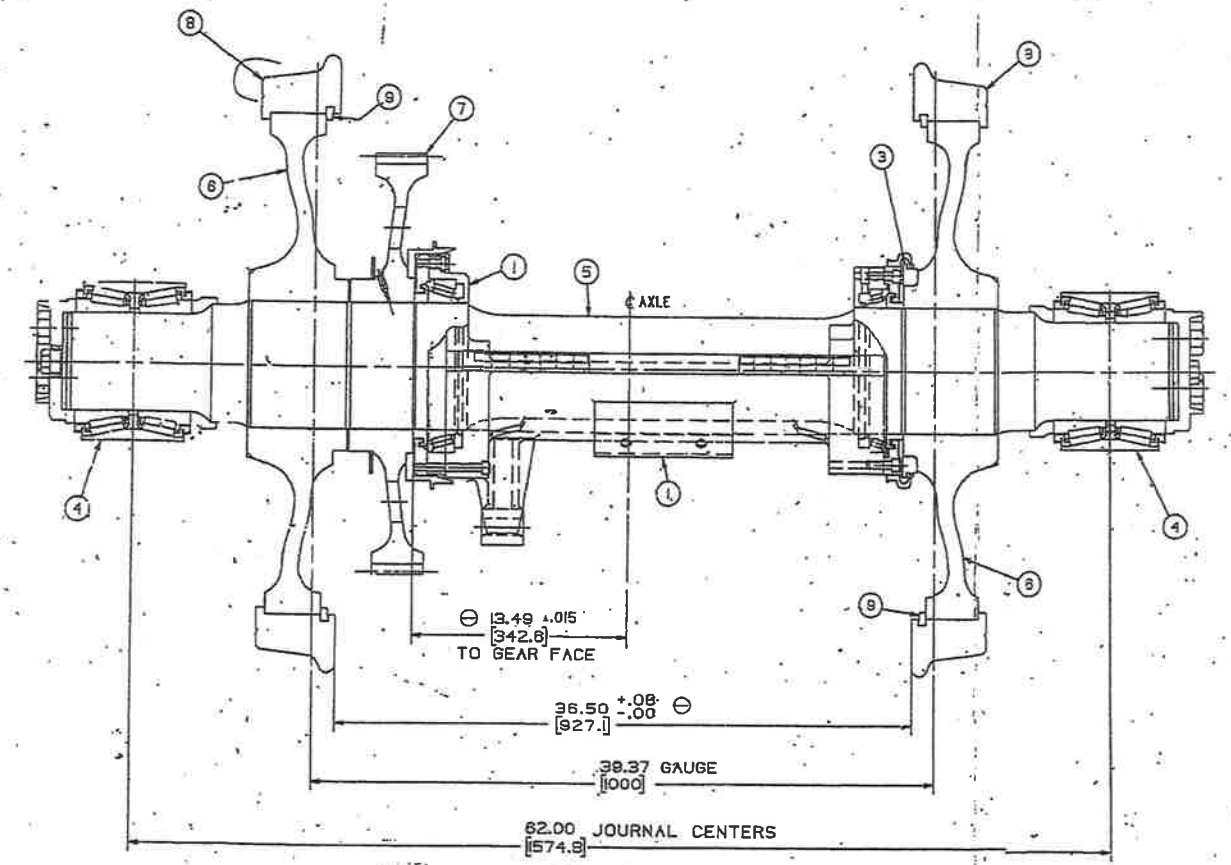

(G1) SEE NOTES
WEIGHT = LATER

This Drawing is the Property of
GENERAL ELECTRIC COMPANY
TRANSPORTATION SYSTEMS DIVISION
THIS DRAWING IS LOANED UPON THE EXPRESS CONDITION THAT IT SHALL NOT BE REPRODUCED IN ANY MANNER, AND SHALL BE RETURNED ON DEMAND. IT IS SUBMITTED FOR EVALUATION PURPOSES AND IT, AND THE INFORMATION CONTAINED THEREIN, SHALL NOT BE OTHERWISE USED OR DISCLOSED TO THIRD PARTIES WITHOUT WRITTEN PERMISSION OF GENERAL ELECTRIC COMPANY.

NOTES
1. WHEELSET TO BE ASSEMBLED IN ACCORDANCE WITH GONINAN SPECIFICATION REN/7200/SPN.005 & GONINAN DWG 851571.
2. WHEELSETS ARE TO BE ASSEMBLED IN LOCO SETS IN WHICH WHEEL SIZES SHALL NOT DIFFER BY MORE THAN 8 TAPES IN SIZE.
3. WHEELS MOUNTED ON THE SAME AXLE MUST BE OF THE SAME TAPE SIZE.
4. WHEELS TO BE PRESSED ONTO AXLE WITHIN A TONNAGE RANGE OF 77 - 113 TONNES (85-125 U.S. TONS)

LOCO ROAD NOS. 4523-4560
LOCO SERIAL NOS. 48681-48718
ORDER NO. 4554
RSR SPECIFICATION NO. CS9-21/2536

PLOT SCALE .25

PLAN REF GC 851571

A.MONAHERN 3-29-95

TSBD ERIE

84D705067

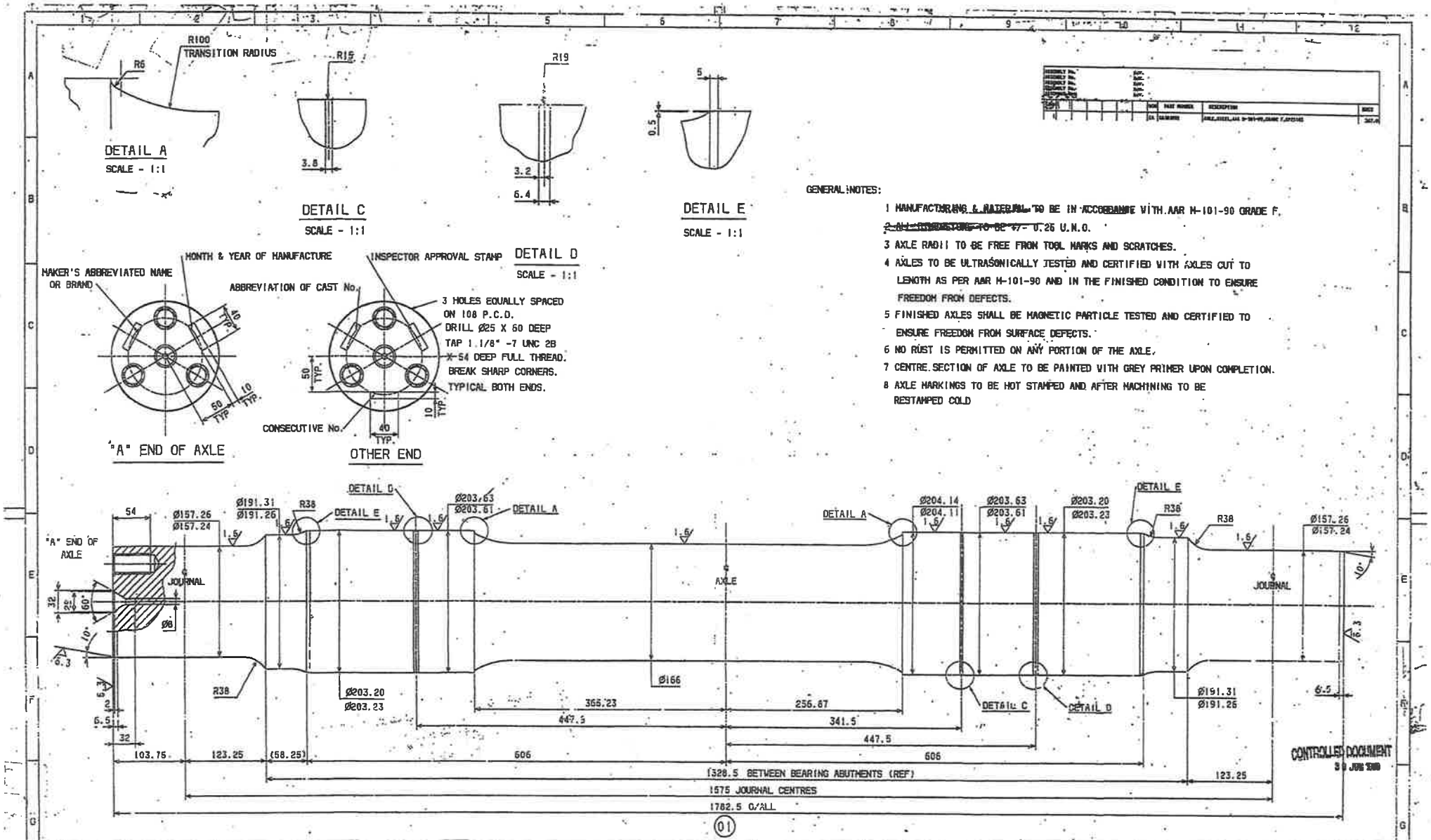

GENERAL NOTES:

1 MANUFACTURING & MATERIAL TO BE IN ACCORDANCE WITH AAR M-101-90 GRADE F.
~~2 ALL SURFACES TO BE 47- 0.25 U.N.O.~~
3 AXLE RADII TO BE FREE FROM TOOL MARKS AND SCRATCHES.
4 AXLES TO BE ULTRASONICALLY TESTED AND CERTIFIED WITH AXLES CUT TO LENGTH AS PER AAR M-101-90 AND IN THE FINISHED CONDITION TO ENSURE FREEDOM FROM DEFECTS.
5 FINISHED AXLES SHALL BE MAGNETIC PARTICLE TESTED AND CERTIFIED TO ENSURE FREEDOM FROM SURFACE DEFECTS.
6 NO RUST IS PERMITTED ON ANY PORTION OF THE AXLE.
7 CENTRE SECTION OF AXLE TO BE PAINTED WITH GREY PRIMER UPON COMPLETION.
8 AXLE MARKINGS TO BE HOT STAMPED AND AFTER MACHINING TO BE RESTAMPED COLD

NO	A
BY	SGK
CHKD	RF
APPRD	
ZONE	

REVISION & DATE	
A	TOLERANCED DIMENSIONS 203.23/203.20 WERE PREVIOUSLY UNDIMENSIONED NOTE 8 NOW CHANGED TO NOTE 8 15/02/1995

PARENT ASSEMBLY/S: 851671 BOGIE WHEELSET & BEARING ASSEMBLY

REFERENCE DRAWINGS

FABRICATION TOLERANCES UNLESS OTHERWISE NOTED: UP TO 300mm ± 1.0mm; 301mm TO 3000mm ± 2.0mm; > 3000mm ± 0mm

THIS DRAWING REMAINS THE PROPERTY OF A.GONINAN & CO. LTD AND MUST BE RETURNED ON DEMAND. ANY INFORMATION CONTAINED ON THIS DRAWING IS THE SUBJECT OF COPYRIGHT AND IS CONFIDENTIAL AND MAY NOT BE COPIED, USED IN ANY WAY OR DISCLOSED TO ANY PERSON EXCEPT WITH WRITTEN PERMISSION OF AND BY THE OWNER POINTED BY A.GONINAN & CO. LTD. © A.GONINAN & CO. LIMITED 1994

A.GONINAN & CO.LTD.
BROADMEADOW N.S.W. ACN 000 603 136

DATE	16/12/94
SCALE	1:2.5 1:1
DRAWN	S.Tco
CHECKED	
ENGINEER	
APPROVED	

THIRD ANGLE PROJECTION A1

CM22-71 DUAL CAB D.E. LOCO
AXLE DETAIL

REV. C

61819

* Take attention when assembling axial play 0.15–0.25 must be kept. Refinishing of Dwg.№ 1-3001 Di-006 (Item 6) if necessary.

Note:-

1) After finishing of wheel axle before shrinking of wheels axle gear must be mounted.
2) All bearings to be mounted should be warmed to 80°c.
3) Wheel centres to be pressed on axle with 67 to 100 tons.

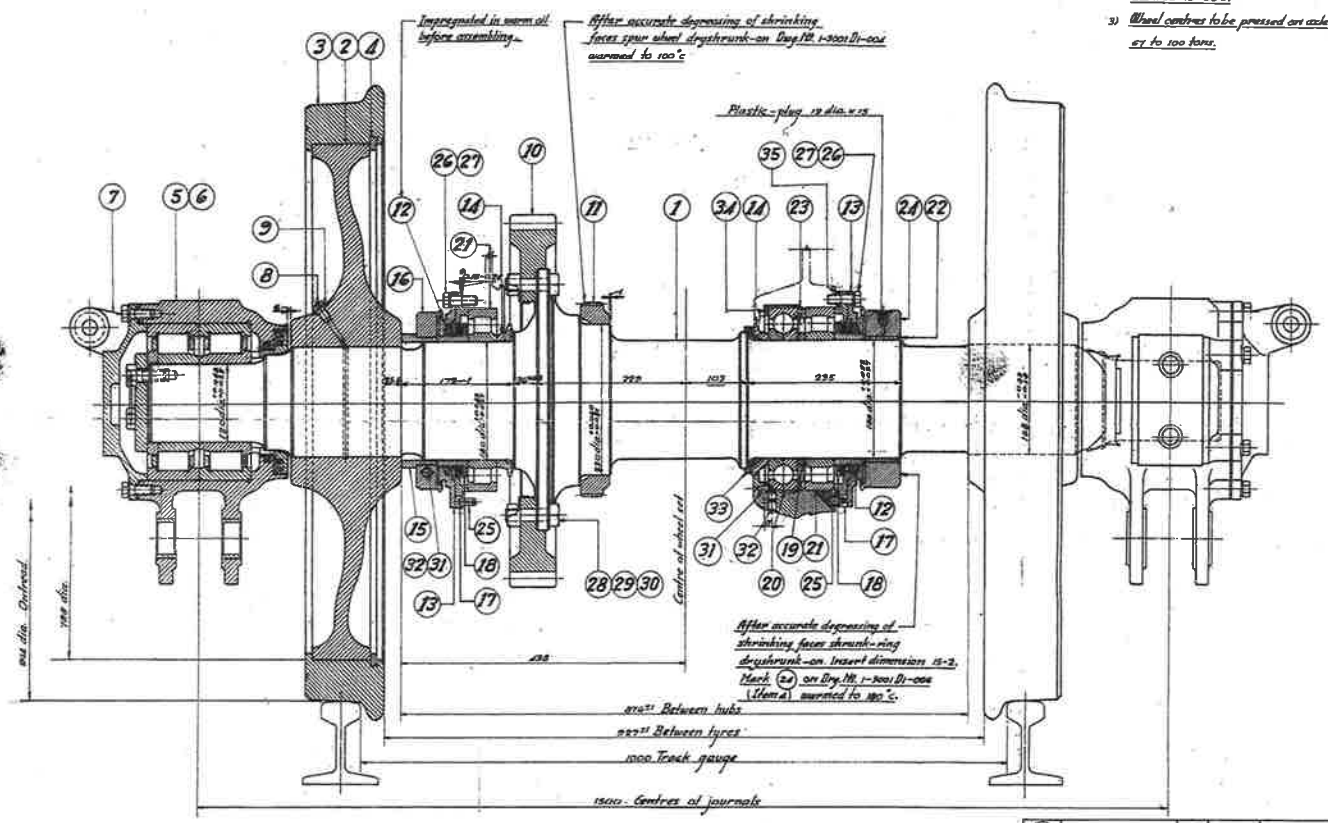

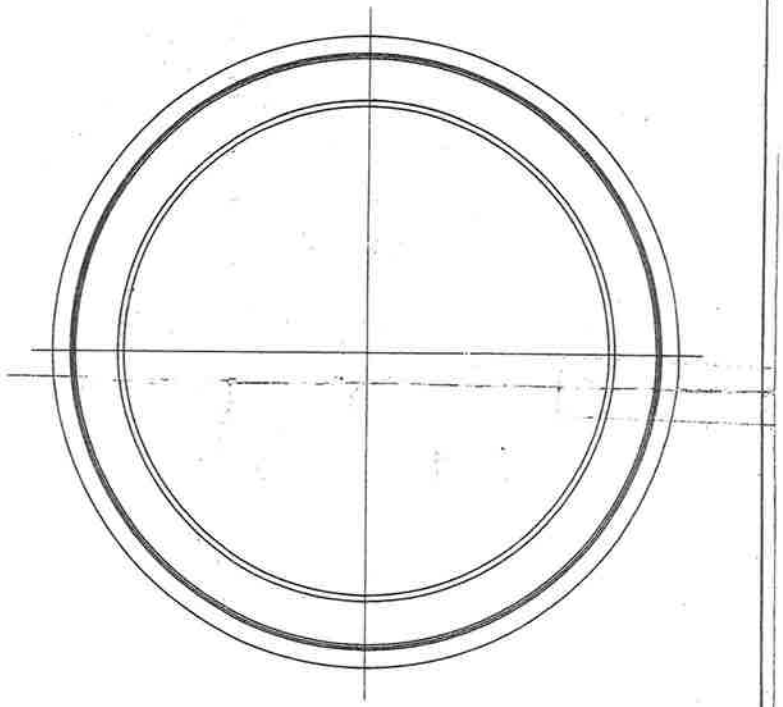

Marks	Name of parts	No/Set	Material	Tens.		Remarks
35	Distance-ring	1				Dwg.№ 1-3001 Di-011
34	Distance-ring	1				Dwg.№ 1-3001 Di-010
33	Distance-collar	1				Dwg.№ 1-3001 Di-009
32	Dowel 12 m6 x 16	1				DIN 7
31	Dowel 8 m6 x 14	1				
30	Locking plate 21	12	Steel.			DIN. 93.
29	Hex. nut M20	12	Steel.	80 kg/mm² to 12 %		DIN. 934.
28	Hex. fitted bolt M20 x 2 x 58	12				Dwg.№ 1-3001 Di-007 (Item 14)
27	Spring washer M 12	16	Spring steel.			DIN. 127.
26	Hex. screw M 12 x 40	16	Steel.	80 kg/mm² to 12 %		DIN. 931.
25	Spring cotter 10 x 24	2	Spring steel.			DIN 1481.
24	Shrunk-ring	2				Dwg.№ 1-3001 Di-004 (Item 4)
23	Distance-ring	1				Dwg.№ 1-3001 Di-007 (Item 13)
22	Sleeve	1				Dwg.№ 1-3001 Di-007 (Item 10)
21	C.V.L. roller bearing NU 1036 MB C3 SKF	2				DIN 5412 0637 388
20	Grooved ball-bearing 62-1036 MBC C4	1				0988 195
19	Distance-ring	1				Dwg.№ 1-3001 Di-007 (Item 12)
18	Labyrinth-ring	2				Dwg.№ 1-3001 Di-006 (Item 8)
17	Labyrinth-cover	2				Dwg.№ 1-3001 Di-006 (Item 8)
16	Ring, 2-parted	1				Dwg.№ 1-3001 Di-008
15	Sleeve	1				Dwg.№ 1-3001 Di-007 (Item 11)
14	Centrifugal ring	2				Dwg.№ 1-3001 Di-007 (Item 9)
13	Cover	2				Dwg.№ 1-3001 Di-006 (Item 7)

Marks	Name of parts	No/Set	Material	Tensile strength/elongation	Remarks
12	Felt-ring 300x230x12	2	Felt.		
11	Spur wheel	1			Dwg.№ 1-3001 Di-004
10	Toothed-rim	1			Dwg.№ 1-3001 Di-003
9	Gasket 14/20	2			DIN 7603.
8	Cap screw M 8 x 20	2	Steel.	Min. 37 kg/mm² to 25 %	DIN 933.
7	Cover	2			Dwg.№ 1-3001 Di-001
6	Axle box casing	2			Dwg.№ 1-3001 Di-002
5	Axle roller bearing	2			Dwg.№ 1-3001 Di-003
4	Gibson ring	2			Dwg.№ Di-1002
3	Tyre	2			Dwg.№ SDi-1014/1
2	Wheel disc	2			Dwg.№ 1-3001 Di-002
1	Axle	1			Dwg.№ 1-3001 Di-005

B1/B3/D: 3001 (01)

R. S. R. — **WHEEL SET** — Scale 1:4 — Dimensions in mm.

Used for	Ref. Dwg. №	
Driving wheels D.H.L. № 3001 – 3007	See table (Dwg.№ 14/1240 & 14/1241)	App.
Remarks:-		B1/B3 T. 3001 (01)
		Date 2-3001 Di-003
Dr.	Ch.	Ch.

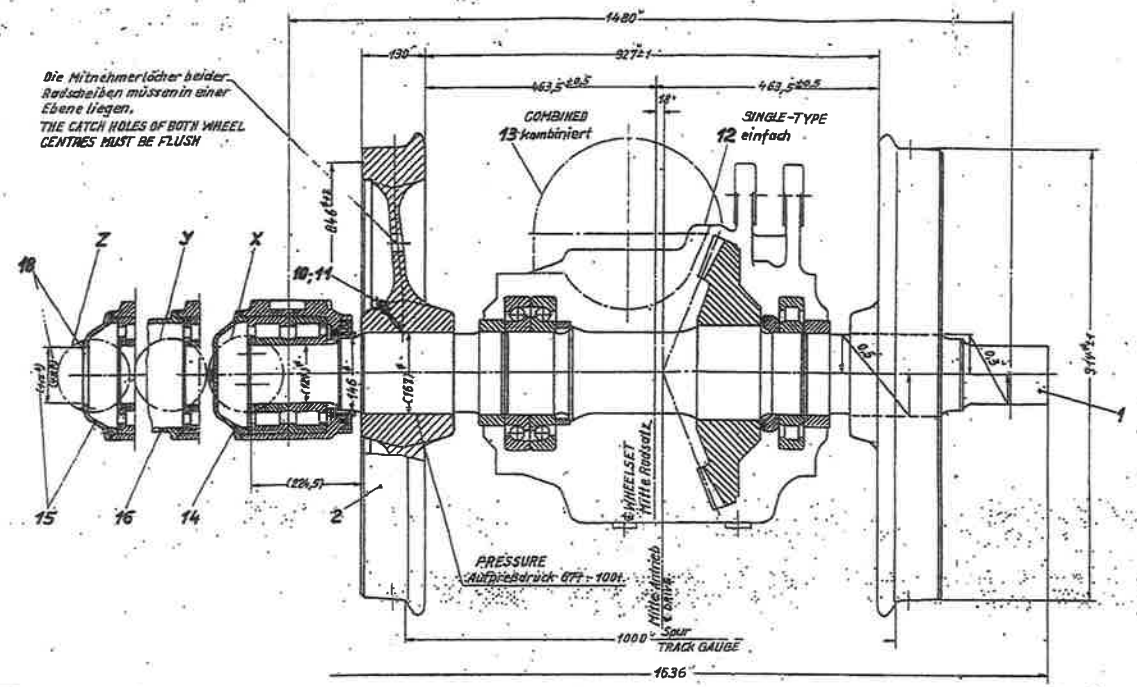

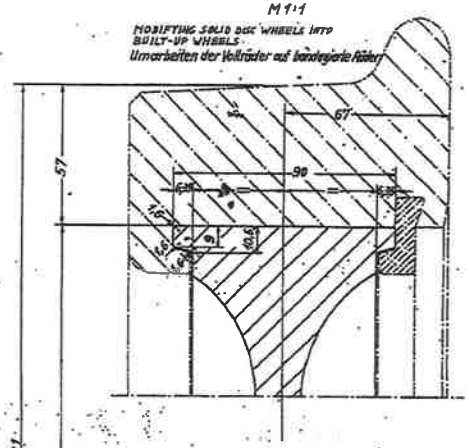

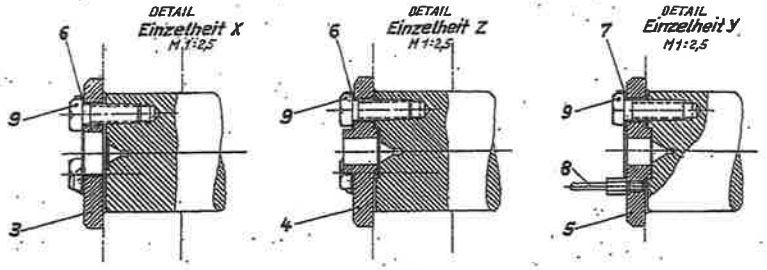

1	-	-	-	Rollenachslager vollst. ROLLER AXLE BEARING	4-08-12. 92.34.11-011		18	für elektr. Fernsender FOR E.C. GENERATOR	82,-
1	1	1	1	Stanzplatte STAMPING	2-08-12. 90.46-053		17	" "	-
-	1	-	-	Rollenachslager vollst. ROLLER AXLE BEARING	4-08-12. 92.34.11-012		16	für Schleifringkörper FOR SLIP RING	82,-
-	1	-	-	Rollenachslager vollst. ROLLER AXLE BEARING	4-08-12. 92.34.11-013		15	Geschwindigkeitsmesser SPEEDOMETER	82,-
1	-	2	2	Rollenachslager vollst. ROLLER AXLE BEARING	4-08-12. 92.34.11-014		14	Vorratsdeckel COMPANY COVER	82,-
-	-	1	1	Achsgetriebe, kombiniert AXLE GEAR COMBINED	0-50-57. 00.61-045		13		9,0
1	1	-	-	Achsgetriebe, einfach SINGLE-TYPE AXLE GEAR	0-50-57. 00.61-047		12		6,0
2	2	2	2	Dichtring 14×20 COPPER GASKET	DIN 7603	Cu	11		0,005
2	2	2	2	Verschlußschraube R 1/4" SCREW PLUG	DIN 910	m SS	10		0,02
6	6	6	6	Sechskantschraube M 20×40 HEX. BOLT	DIN 933	m 8 G	9		0,21
-	3	-	-	Gewindestift THREADED PIN	4-08-12. 90.41-042		8.		0,05
-	1	-	-	Sicherungsblech SAFETY PLATE	4-08-12. 96.11-012		7		0,15
2	1	2	2	Sicherungsblech SAFETY PLATE	4-08-12. 96.17-011		6		0,15
-	1	-	-	Druckplatte THRUST PLATE	4-08-12. 12.31-007		5.		0,25
1	1	-	-	Druckplatte THRUST PLATE	4-08-12. 12.31-006		4.		0,25
-	-	2	2	Druckplatte THRUST PLATE	4-08-12. 12.31-005		3.		0,25
2	2	2	2	Vulkan. Stahl. Schmiedestück	1-08-12. 31.15-016		2.		5,0
1	1	1	1	Treibachsenwelle DRIVING AXLE-SHAFT	1-08-12. 12.14-013		1		26,0
x	-	-	-	Treibradsatz, vollst. DRIVING WHEELSET COMPLETE	-040		-	R1	1700
-	x	-	-	Treibradsatz, vollst. DRIVING WHEELSET COMPLETE	-039		-	R4	1700
-	-	x	-	Treibradsatz, vollst. DRIVING WHEELSET COMPLETE	-038		-	R3	1700
-	-	-	x	Treibradsatz, vollst. DRIVING WHEELSET COMPLETE	-037		-	R2	1700

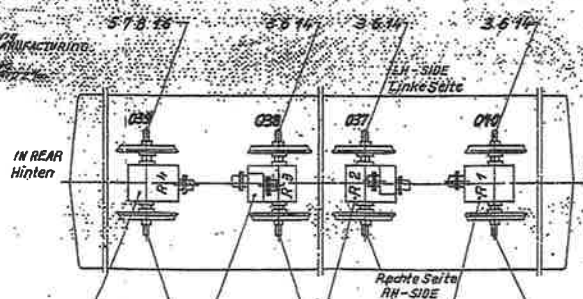

0,5mm

0,5mm

± 0,5mm

RSR

Treibradsatz, vollst.

DRIVING WHEELSET COMPLETE

1-08-12.90.46

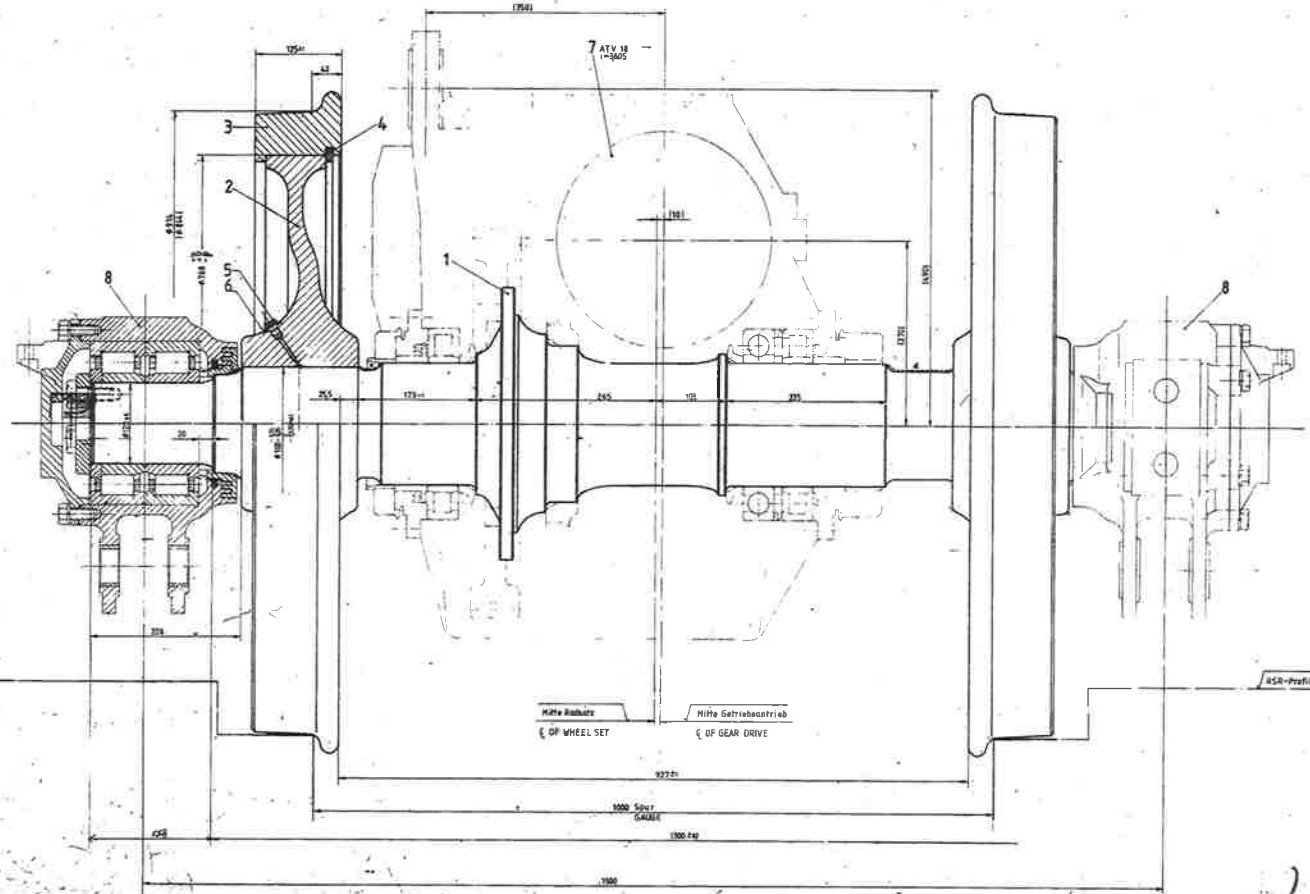

1. Zulässiger Unterschied der Laufkreisdurchmesser der Räder eines Radsatzes, sowie der Räder einer Lokomotive darf 0,3% nicht überschreiten. =0,27 mm.-
2. Zulässige Planlaufabweichung an den inneren Stirnflächen coll Radfuge =0,5 mm
3. Zulässige Rundlaufabweichung im Laufkreisdurchmesser einschl. Unrundheit =0,3 mm
4. Zulässige Formabweichung des Laufprofiles =±0,5 mm.-
5. Zum Aufpressen der Räder auf die Achse wird als Schmiermittel Molybdändisulfid (Molykote, Paste G) verwandt.-

Aufpreßdruck 52 ~ 7% Mp.

6. Vor der Achslagermontage sind die gekennzeichneten Flächen mit dem Fertiganstrich versehen.-

1. PERMISSIBLE DIFFERENCE IN TREAD CIRCLE DIAMETER OF THE TWO WHEELS IN ONE WHEEL SET AS WELL AS OF ALL WHEELS IN ONE LOCOMOTIVE MUST NOT EXCEED 0,3% = 0,27 mm.
2. PERMISSIBLE DEVIATION FROM VERTICAL PLANE AT THE INNER FRONT FACE OF THE WHEEL RIM =0,5 mm.
3. PERMISSIBLE ECCENTRICITY OF TREAD DIA INCLUSIVE OVALNESS =0,3 mm.-
4. PERMISSIBLE SHAPE DEVIATION OF TREAD-PROFILE =±0,5 mm.-
5. IN MOUNTING WHEEL ON AXLE IT IS RECOMMENDED THAT MOLYNOTE - "PASTE G" TO BE USED AS LUBRICANT.

PRESS-ON PRESSURE 52 TO 7% Mp

6. BEFORE MOUNTING THE AXLE BOXES THE SURFACES MARKED WITH DOTTED LINES ARE TOP COATED

Anpressung zum Aufschrumpfen der Räder auf die Achswelle
(nur für Erstausrüstung)
1. Räder gleichmäßig auf 270°C erwärmen.-
2. Räder auf die Achswelle aufschrumpfen.-
3. Anpreßversuch: 63 Mp- an einem Rad pro Lok.

APPLICATION OF SHRINKING WHEELS ON AXLES:-
(ONLY FOR FIRST MOUNTING)
1. HEAT EACH WHEEL UNIFORMLY TO 270° C.-
2. SHRINK WHEELS ON AXLE
3. DEPRESSING TEST: 63 Mp- ONE WHEEL PER LOCO.

Teil 1+6 = 1025 kg

–	JOURNAL BEARING	8	
–	AXLE GEAR ASSB.	7	
2	WASHER	6	
2	SCREW	5	
2	DRIVING RING	4	45
2	TYRE	3	170
2	WHEEL	2	175
1	AXLE	1	320

STATE RAILWAY OF THAILAND

DIESEL HYDRAULIC LOCOMOTIVE
TYPE DHG 700 C

RSR-SPEC. NO.: CSD 13/2526, BE 2527 (1984 A.D.)

MANUFACTURER: HENSCHEL 32840...849

SCALE: 1:10 WHEEL SET I/III

DRAWING NO: 031

Treibradsatz I/III

628-111-01-00

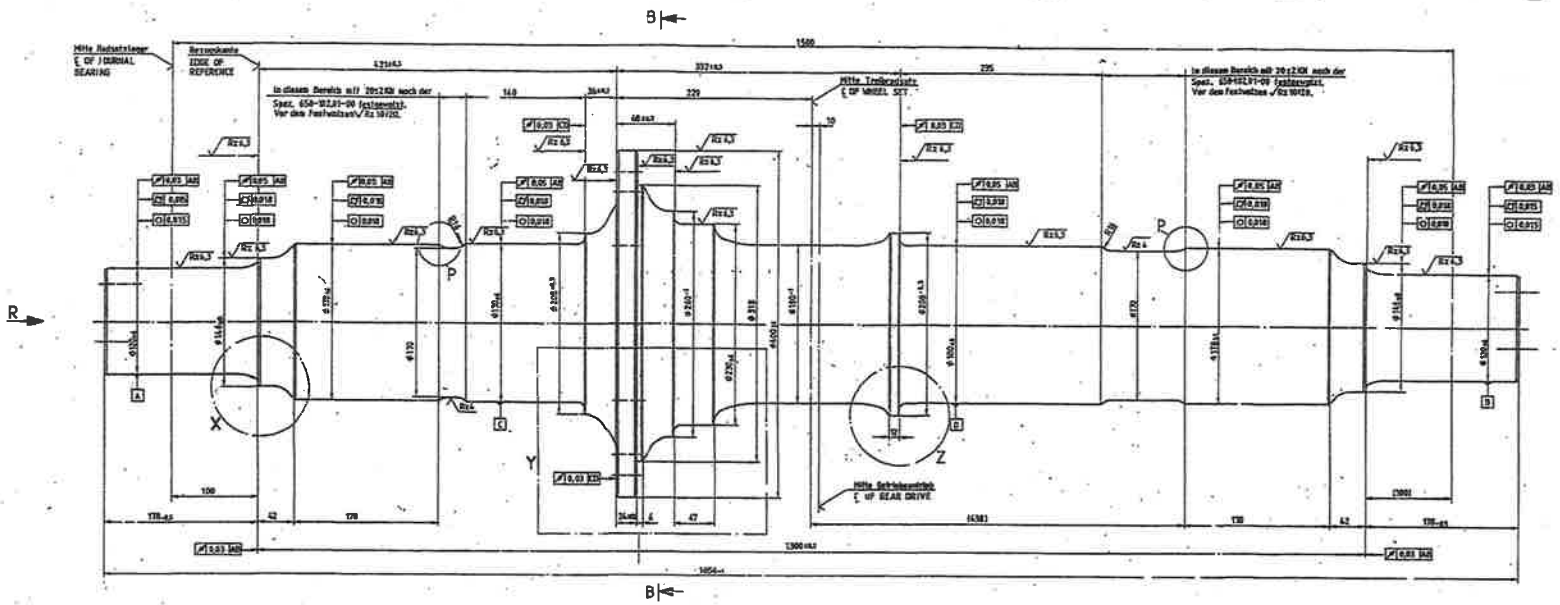

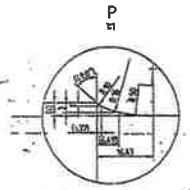

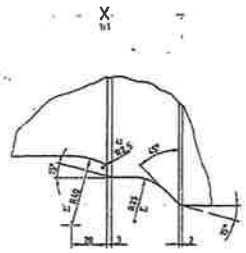

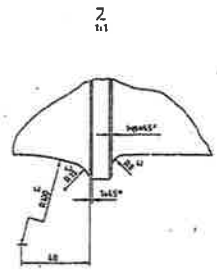

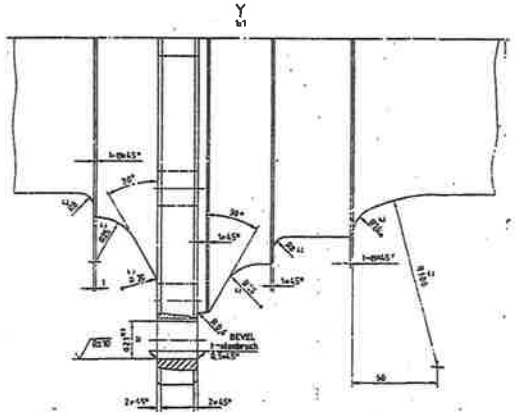

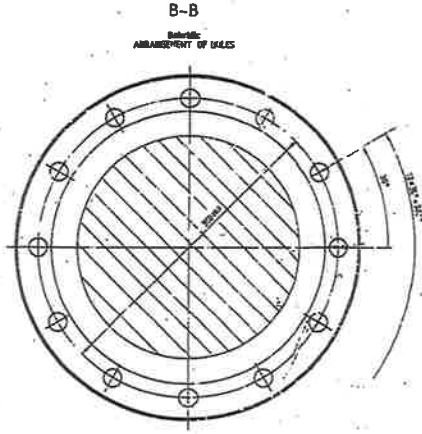

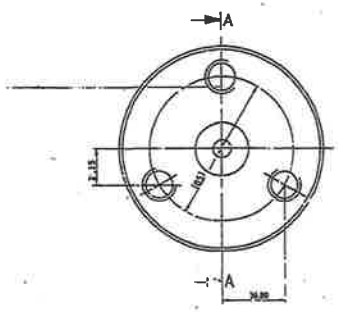

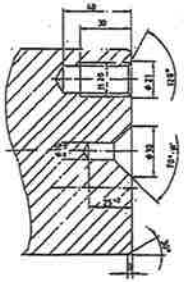

Fertigungshinweise

8. Vor dem Abdrehen des Werkstückes des Werkstoff-, Prüf- und Kennzeichen, Lieferjahr und F-Zeichen auch dieser von der Abnahme und der farbig markierten Stirnfläche umgestempelt werden.
2. Stempelung nach Zeichnung 628-111.04-00
3. 12 Bohrungen, vorgebohrt auf ø 8 20mm, gleichmäßig auf dem Umfang verteilt, zusammen mit dem Zahnrad aufgebohrt und aufgerieben.
4. Anrundungen und Übergänge : R_z 8 4µm
5. Gesamtbearbeitung: R,25 R,10, R,63, R,4)
6. Bauteil-Nr.: 218-111.45-01
7. Technische Lieferbedingungen: WN 192 04 jeweils x Pkt 8
8. Werkstoff: *
9. 7epaähriger Labyrinthring siehe : 218-116.11-03
10. Meßblatt Meßpunkt siehe : 218-111.11-00 BL.3

TO BE OBSERVED DURING FABRICATION:

1. BEFORE THE STAMP OF THE UNMACHINED PART IS MACHINED IT HAS TO BE STAMPED TO THE FINALLY WORKED END SURFACE BY A CHECKER.
2. STAMP ACCORDING TO DRW 628-111.04-00.
3. 12 HOLES DRILLED SMALLER FIRST TO DIA 8 20mm, SYMMETRICALLY, BORED IN COPOEN WITH THE GEARWHEEL AND REAMED.
4. RADII AND TRANSITION POLISHED - R_z 4 4µm
5. MACHINING GENERALLY: R_z 25 R_z 10, R_z 6.3, R_z 4)
6. UNMACHINED PARTS no. 218-111.45-01
7. TECHNICAL TERMS OF DELIVERY WENCHEL STANDARD 192 04, WHEREVER SEE PT. 8
8. MATERIAL: *
9. ACCORDING LABYRINTH RING 218-116.11-03
10. MEASURING CHART CORRESPONDING SEE 218-111.11-00 BL.3

* Werkstoff:

24 SEV 14 V 1,5 nach ESR-Verfahren hergestellt, vergütet

Werkstoffspezifikation

Mechanische Eigenschaften:

Streckgrenze / 0,2 R_e ≥ 540 N/mm²	≥ 600 N/mm²
Zugfestigkeit R_m = 800 bis 900 N/mm²	880 bis 980 N/mm²
Fruchdehnung A_5 ≥ 14%	17%
Brucheinschnürung Z ≥ 40%	50%
Kerbschlagarbeit A_v ≥ 120	80 J (-30°C, ISO-V)

Chemische Zusammensetzung in Gew.%:

C = 0,23 bis 0,29	Cr = 1,30 bis 1,60
Si = max 0,30	Ni = 3,25 bis 3,65
Mn = 0,30 bis 0,50	Mo = 0,30 bis 0,50
P = max 0,040	V = max 0,10
S = max 0,015	

Andere techn. Lieferbedingungen nach WN 192 04

100	1,5		
230	1,5		
180	2,5		
120	3,5		
14,5	1,5		
17,5	0,5		

AXLE
Radsatzwelle

218-111.11-01

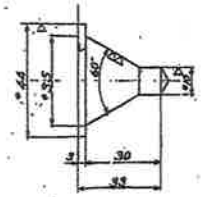

DETAIL A

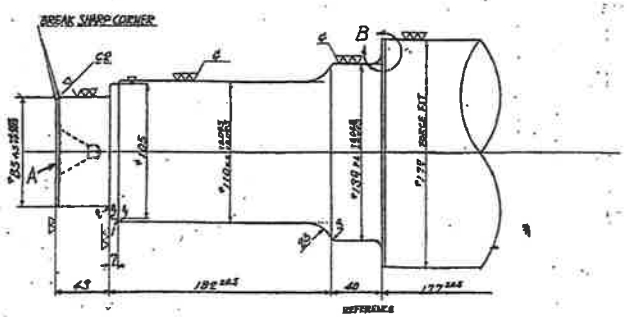

DETAIL C

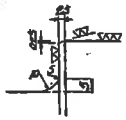

DETAIL B

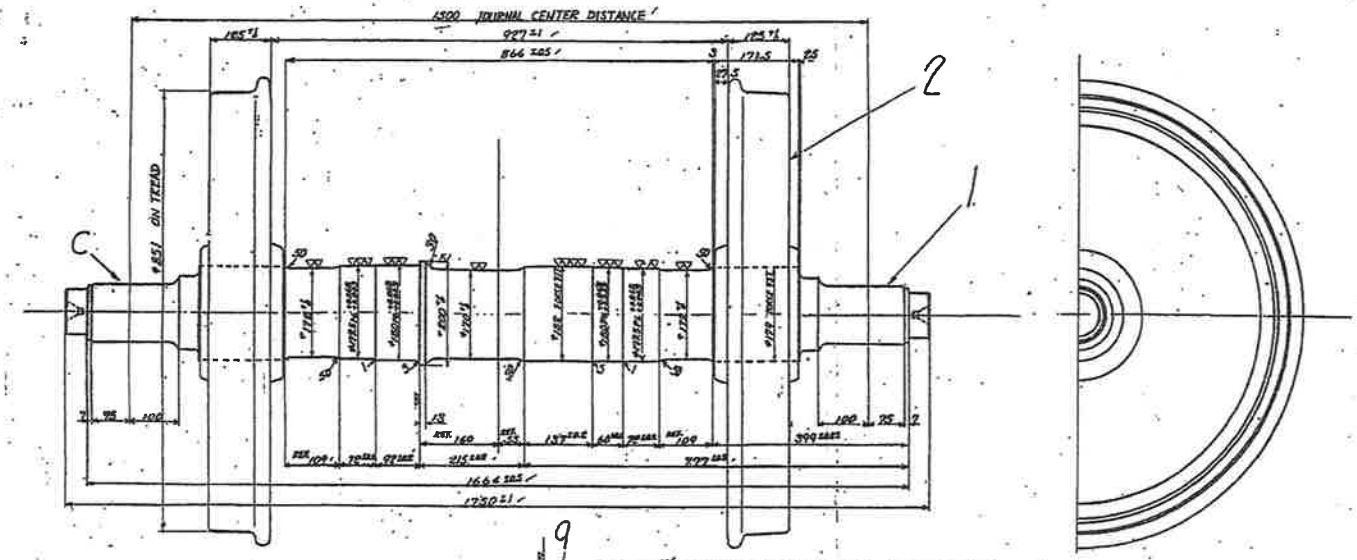

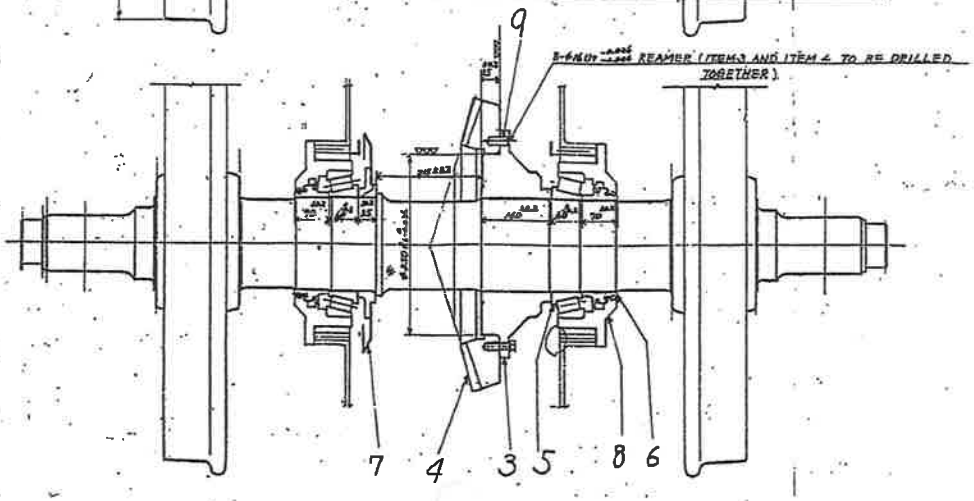

NOTE

1 VARIATION IN THE DIAMETER BETWEEN THE PAIR WHEELS SHOULD BE LESS THAN 1mm.

2 THE LIMIT OF THE PRESSING FORCE TO FIT WHEELS ON AN AXLE SHALL BE FROM 70 TO 84 TONS (METRIC TONS).

3 THE STAMPING SHALL CONFORM TO THE DRAWING NO.DISD-05651.

4. THE LIMIT OF THE PRESSING FORCE TO FIT GEAR BOSS ON AN AXLE SHALL BE FROM 26~27 TON (METRIC TONS) TARGET INTERFERENCE FROM 0.13MM TO 0.14 MM.

5. TARGET INTERFERENCE OF KNOCK PIN (ITEM 9) IS FROM 0.02 MM TO 0.3 MM.

No.	NAME OF PARTS	No./SET	MATERIALS	TENSILE STRENGTH & ELONGATION	REMARKS
9	KNOCK PIN	8	S45C		EID-14835
8	BEARING HOUSING OF DRIVING AXLE	2	SC46		90CD DC 04278
7	OIL RING ASS'Y	1	ASS'Y		90CD DC 04283
6	SUNDER OF DRIVE SHAFT	2	S45C		90CD DC 04282
5	TAPER ROLLER BEARING	2	ASS'Y	B 32036	90CD DC 04285
4	DRIVING SPUR GEAR	1	SNC420H		90CD DC 04280
3	GEAR BOSS	1	S45C		90CD DW04 DC 04281 CID-14181
2	WHEEL	2	ASS'Y		8160-14106
1	AXLE	1	AXLE STEEL	45~52kgf/mm² 18%~22% (SEE SPEC IN DRAWING)	

R S R. WHEELS AND AXLE (D)

SCALES 1/4, 1/2, 1/5

DIMENSIONS IN MM

USED FOR: PASSENGER CAR, DIESEL RAILCARS AND BRAKE VANS

REF. DWG. No. -14621

TOKYU CAR

REMARKS

APP. EMI

SANCO.

DATE

1-1101DRC1-001

1110118

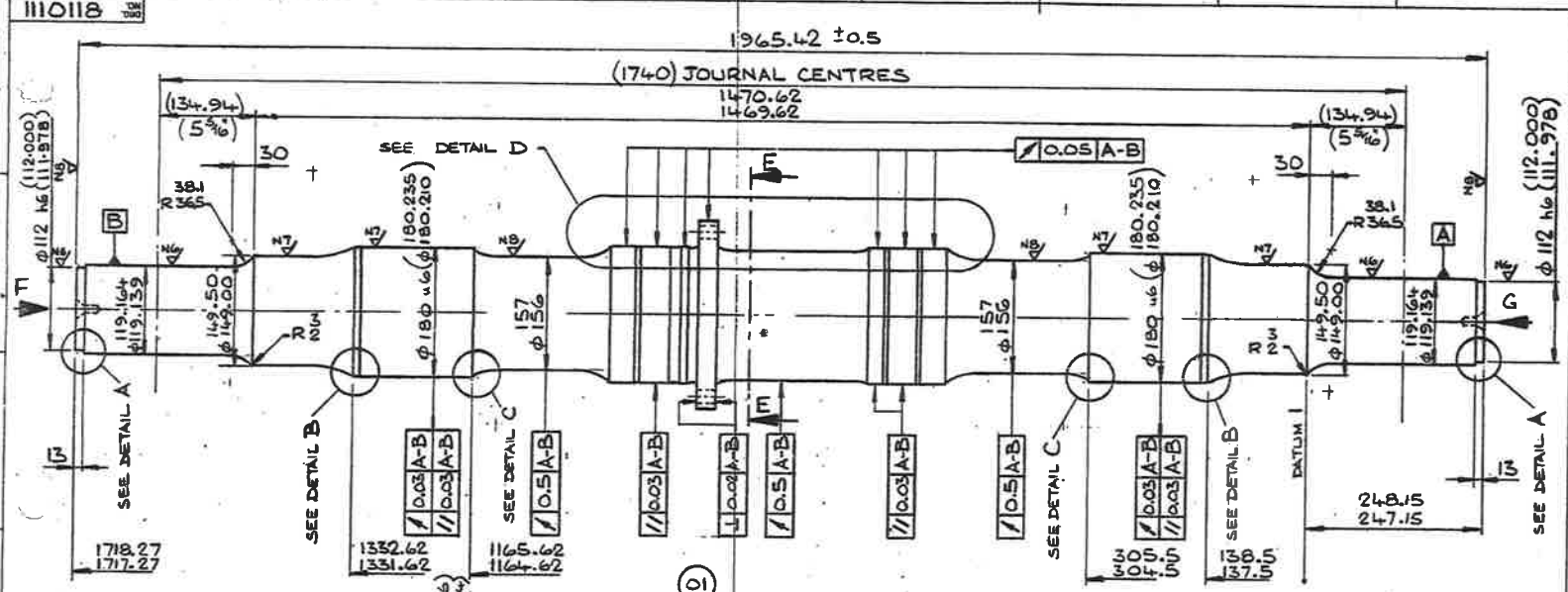

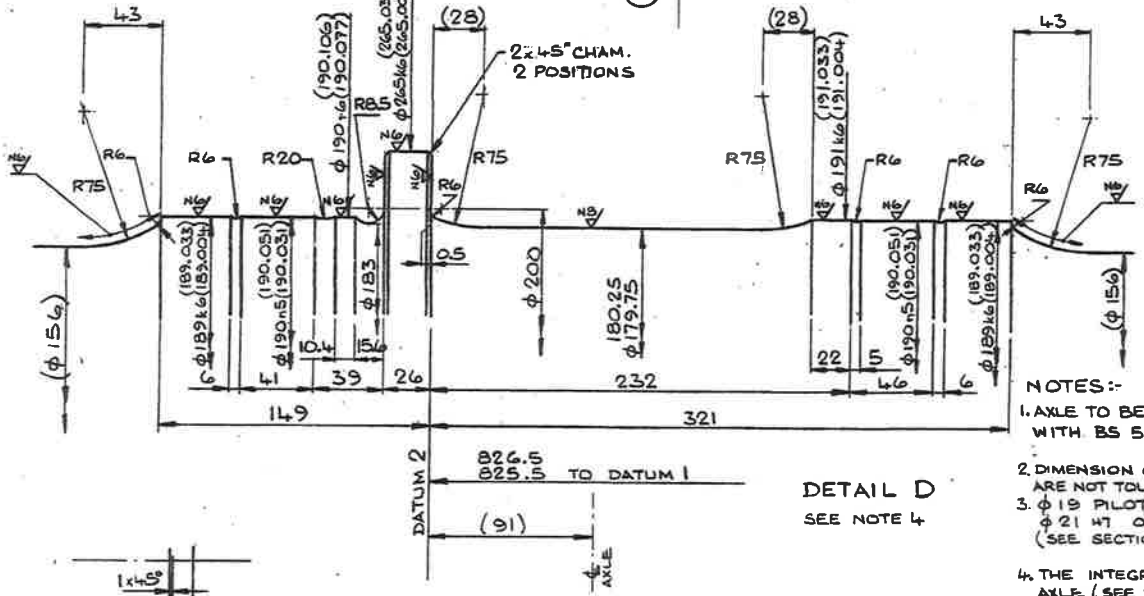

DETAIL D

SEE NOTE 4

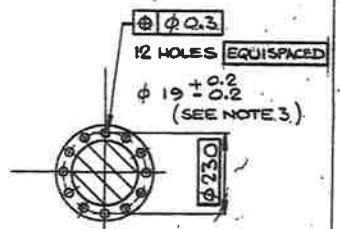

SECTION EE

SCALE: 1:5

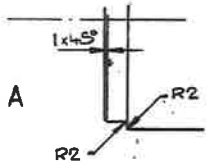

DETAIL A

NOTES:-

1. AXLE TO BE PRODUCED IN ACCORDANCE WITH BS 5892 PARTS 1 AND 6.
2. DIMENSION OVER, TO, OR BETWEEN SURFACES WHICH ARE NOT TOLERANCED ON DRAWING TO BE ± 0.25 mm.
3. φ19 PILOT HOLES ARE MACHINED OUT TO φ21 H7 ON ASSEMBLY OF GEAR INTO AXLE (SEE SECTION E-E)
4. THE INTEGRITY OF THE CENTRE PART OF THE AXLE (SEE DETAIL D) IS THE RESPONSIBILITY OF KAELBLE-GMEINDER.

THIS DRG TO BE READ IN CONJUNCTION WITH 1110116

ISSUE	CHNG NO.	ALTERATION	
A		FIRST ISSUE	MFD
B	B/97	AT DIM. φ112 h6 (112.000/111.978) MACHINING SYMBOL WAS N8.	MFD
C		TITLE BLOCK: CONTRACT Nº ADDED	MFD
D		NOTE 5 APPENDED. ECN Nº T3-15 0002.	

NOTES:- (CONTINUED)

5. THE FOLLOWING TESTS ARE REQUIRED
   a) IMPACT. b) MICRO. STRUCTURE. g) FALLING WEIGHT TEST. d) ULTRASONIC. e) MAGNETIC PARTICLE INSPECTION (MPI) f) VISUAL
   NOTE THAT ITEMS a) b) and d) ARE EXECUTED IN ACCORDANCE WITH BS 5892 PART. 1
   ITEM c) IS CARRIED OUT IN ACCORDANCE WITH THAILAND RSR. SPEC. SM-10/2503/1
   e) IS CARRIED IS CARRIED OUT ON TRANSITION RADII ONLY. NO DEFECTS ARE PERMISSIBLE
   f) IS CARRIED OUT. i) IF NOT MPI'D
   ii) IF MPI, ALL VISIBLE AREAS
   DEFECT LEVELS TO BE AS SPECIFIED IN AAR SPEC. AAR-M-101-85 APPENDIX 'A'. DEFECTS MAY BE REMOVED IN AREAS SPECIFIED & AS SPECIFIED IN AAR SPEC.
6. FOR SUITABLE CORROSION PROTECTION SEE BREL PROCUREMENT SPEC. DES/PS/89/080

QTY PER ASSY	REF	DESCRIPTION	PART NUMBER	DRG. PART ISSUE	PART STATUS	MATERIAL SPEC. ETC.	WT kg
	01	POWER AXLE	111-0118-01	02	C	STEEL TO BS 5892 Gr A1T	319

BREL LIMITED

PART STATUS: (PART STAT)

BLANK = DRAFT (FOR USE ON PRE-PRODUCTION DESIGNS ONLY)

C = CURRENT (APPROVED BY ENGINEERING FOR USE ON PRODUCTION DESIGNS)

REV	DATE	DRAWN	CHECK	ENGRG	APPRV
D	25-10-90	DP	CSC		
C	17-4-90	DP	SYB		
B	23-3-90	DP	PDJ		
A	15-7-89	M.G.			

TITLE: DETAIL OF AXLE (POWER)

RSR CONTRACT CSDR-6/6080

DRG. NO. 111.0118

SCALE 1:2.5 111 1:5

THE TOLERANCE ON DIMENSIONS FOR WHICH NO LIMITS ARE GIVEN SHALL BE AS SHOWN BELOW

NOMINAL SIZE	OVER 0 TO 6	6 TO 30	30 TO 120	120 TO 400	400 TO 1000	1000
MACHINED	±0.1	±0.2	±0.5	±1.0	±2	±3
FABRICATED	±1		±1.5	±2	±3	±4

PROJECTION

DO NOT SCALE

UNLESS OTHERWISE STATED:

DIMENSIONS ARE IN MILLIMETRES

DRAWING PRACTICE TO BREL LIMITED PROCEDURE NO. DES/STD/BR/100

SCREW THREADS ARE TO St. JAC CLASS 2A/2B

WELDING TO BE TO BS 2910 PT.1 (ALUM. T.I.G.) BS 3571 PT.1 (ALUM. M.I.G.) BS 5135 QUALITY CAT D (STEEL)

SHARP EDGES TO BE DEBURRED

MACHINED SURFACES TO BE ✓ (BS 1134)

BOLTED JOINTS TO BE IN ACCORDANCE WITH BREL LIMITED PROCEDURE NO. CED/WP/B/8002

EXPOSED EDGES OF GAS CUT PLATE TO BE TO BREL LIMITED PROCEDURE i.e. CED/WP/B/8-914

THIS DRAWING CONTAINS CONFIDENTIAL INFORMATION OF BREL LIMITED ("THE COMPANY") AND THE COPYRIGHT THEREIN BELONGS TO THE COMPANY. ALL RIGHTS CONFERRED BY THE LAW OF COPYRIGHT AND BY VIRTUE OF INTERNATIONAL COPYRIGHT CONVENTIONS ARE RESERVED TO THE COMPANY. THE DRAWING AND THE INFORMATION CONTAINED THEREIN OR ANY PART THEREOF MUST NOT BE REPRODUCED, DISCLOSED OR USED FOR PURPOSES OTHER THAN THOSE FOR WHICH THE PRIOR WRITTEN CONSENT OF THE COMPANY HAS BEEN GIVEN.

© BREL LIMITED

TEMPORARY COMMENT CONNECTIONS OR ATTACHMENTS OTHER THAN THOSE SHOWN ON THE DRAWING ARE NOT PERMITTED WITHOUT THE APPROVAL OF THE ENGINEERING MANAGER.

DWG NO. 5030368

A0

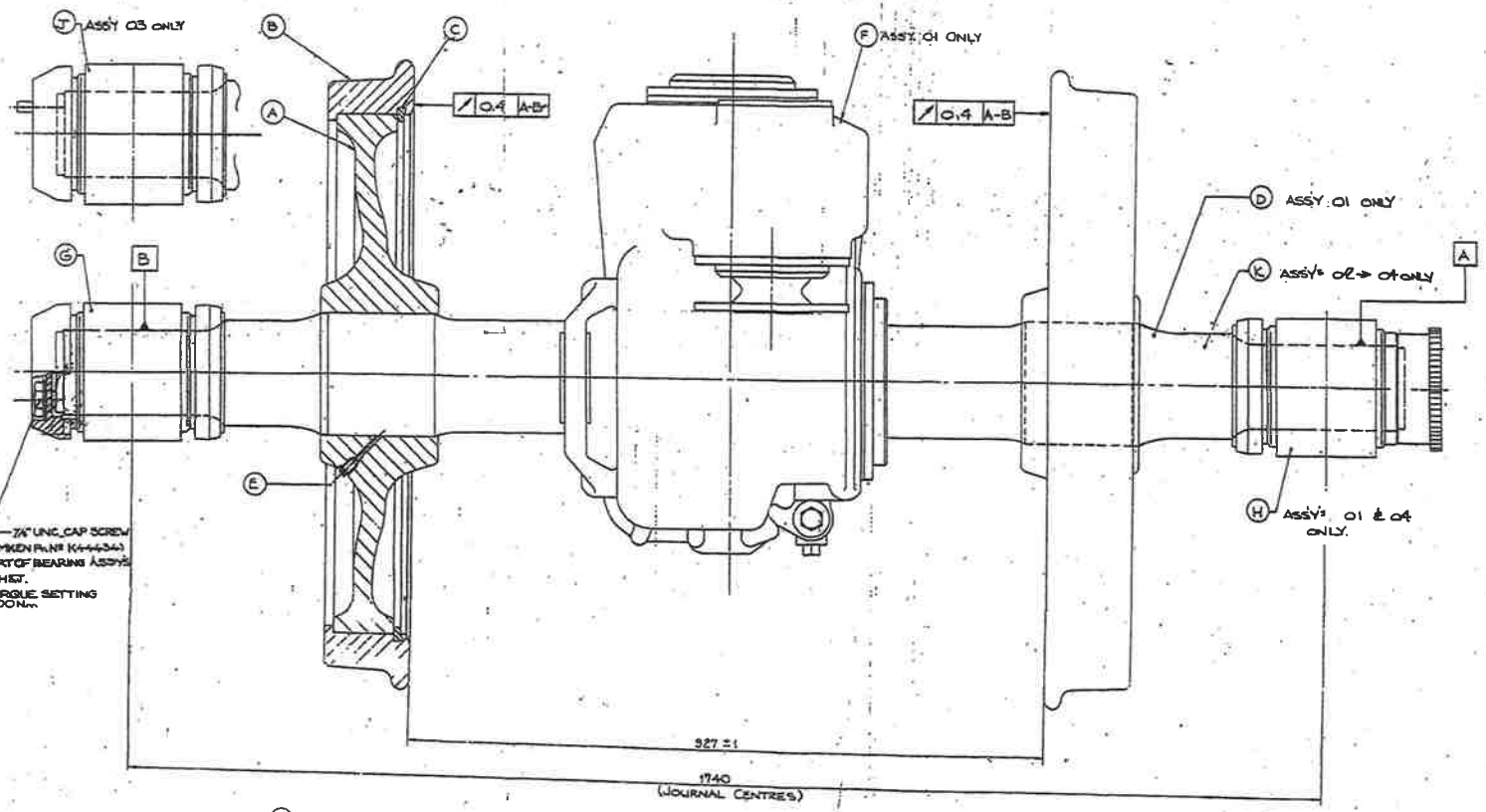

(01) ASSEMBLY OF WHEELSET (POWER) SHOWN

(02) ASSEMBLY OF WHEELSET (TRAILER)

(03) ASSEMBLY OF WHEELSET (TRAILER WITH PROVISION FOR SPEED PROBE)

(04) ASSEMBLY OF WHEELSET (TRAILER WITH PROVISION FOR W.S.P.)

NOTES.

1. WHEELSET ASSEMBLY TO COMPLY WITH THE REQUIREMENTS OF B.S. 5892 PART 2 FOR PASSENGER CARRYING STOCK.
2. WHEELS TO BE SHRINK FITTED TO AXLE.
3. THE CAVITY RESULTING FROM THE WHEEL BOSSES OVERHANGING THEIR RESPECTIVE SEATS SHALL BE FILLED WITH CORROSION RESISTANT MATERIAL ESSO RUSTBAN 324 OR SHELL ENSIS COMPOUND 356 OR SUITABLE ALTERNATIVE
4. ELECTRICAL RESISTANCE TESTS ARE NOT REQUIRED UNLESS OTHERWISE SPECIFIED BY THE ENGINEER.
5. OIL INJECTION HOLE PLUG TO BE SECURED FINGER TIGHT TO THREAD END THEN A FURTHER HALF TURN TO LOCK.
6. FOR SUITABLE CORROSION PROTECTION SEE WHEELSET PROCUREMENT SPEC. DES/PS/89/080
7. TREAD DIAMETER IS 851 WHEN NEW WITH A FINAL TURNING DIAMETER OF 811 TREAD DIAMETER OF FINISH MACHINED WHEELS ON SAME AXLE SHALL BE WITHIN 0.3 OF EACH OTHER. TREAD PROFILE IS TO RSR DRG Nº PG1-2151
8. THE MAXIMUM DIFFERENCE BETWEEN DIAMETERS OF ANY WHEEL WITHIN MATCHED WHEELSETS PER BOGIE SHALL NOT EXCEED 0.3 mm.
9. WHEN WHEELSETS ARE TO BE STORED, ALL OUTER SURFACES OF BEARING TO BE GENEROUSLY COATED WITH GREASE AND THEN ENVELOPED WITH A HEAVY GAUGE POLYTHENE BAG WHICH SHOULD BE COMPLETELY SEALED WITH A BROAD ADHESIVE TAPE TO PREVENT INGRESS OF WATER.
10. WHEELSET TO BE EXEMPT FROM DYNAMIC BALANCING.
11. SUFFICIENT MEASURES TO BE TAKEN TO ENSURE IMBALANCE ON WHEELSET DOES NOT EXCEED 0.125 kg.

THE TOLERANCE ON DIMENSIONS FOR WHICH NO LIMITS ARE GIVEN SHALL BE AS SHOWN BELOW							
NOMINAL SIZE	OVER	0	6	30	120	400	1000
	TO	6	30	120	400	1000	2000
MACHINED		±0.2	±0.5	±0.8	±1.2	±3	±5
FABRICATED		±1	±1	±1.5	±3	±5	±8
NOMINAL SIZE	OVER	2000	4000	8000	12000	16000	20000
	TO	4000	8000	12000	16000	20000	
MACHINED		±8	±13	±16	±17	±18	±19
FABRICATED		-	-	-	-	-	-

UNLESS OTHERWISE STATED:
SCREW THREADS ARE TO BS 3643 CLASS 6H/6g
MACHINED SURFACES TO BE NO ✓ (BS 1134)

SHARP EDGES TO BE DEBURRED.
TEMPORARY OR PERMANENT CONNECTIONS OR ATTACHMENTS OTHER THAN THOSE SHOWN ON THE DRAWING ARE NOT PERMITTED WITHOUT THE APPROVAL OF THE ENGINEERING DIRECTOR.
BREL LIMITED
DIMENSIONS ARE IN MILLIMETRES.

THIS DOCUMENT IS CONFIDENTIAL AND THE COPYRIGHT PROPERTY OF BRITISH RAIL ENGINEERING LTD. IT MUST NOT BE LOANED, COPIED OR USED FOR ANY PURPOSE OTHER THAN THAT FOR WHICH IT WAS SUPPLIED, WITHOUT WRITTEN APPROVAL OF:
THE ENGINEERING DIRECTOR,
BREL LIMITED,
PETERS HOUSE, GOWER ST., DERBY, DE1 1AH

DIRECTION DO NOT SCALE

ISSUE	GRID REF	ALTERATION	
A		FIRST ISSUE.	MFD
B	PS PS PS	MARKED UP FOR TS-156. A & Q COLUMN RE-WRITTEN. BEARING ASSEMBLIES ADDED PICTORIALLY. ITEMS G, H & K. OIL INJECTION GROOVE RE-POSITIONED ITEMS 03 & 04 ADDED. NOTE 7. LAST TRENING DIAMETER WAS 679 NOTES 9, 10 & 11 REPLACED WITH NEW NOTES NOTE 6 RE-WRITTEN.	MFD
C	/G4	NOTES 7 & 8 CHANGED FROM READING '0.25' TO 0.3	
D	C.1.	PART SECTIONS & NOTE ADDED. PART NOS FOR ITEMS G, H & J ADDED.	MFD

QUANTITY W	X	Y	Z	REF	DESCRIPTION	CAT./PART NO.	MATERIAL SPEC. ETC.	WT KG
-	1	1	1	K	TRAILER AXLE	111-0117-01		
-	-	1	-	J	BEARING ASSY WITH DRIVING LUG	400-0158-44		
1	-	-	1	H	BEARING ASSY WITH TRAILED WHEEL	400-0158-44		
1	2	1	1	G	BEARING ASSY WITH CAP.	400-0158-45		
1	-	-	-	F	FINAL DRIVE	400-0109-04		
2	2	2	2	E	OIL INJECTION PLUG	859046-01		
1	-	-	-	D	POWER AXLE	111-0118-01		
2	2	2	2	C	GIBSON RING	411-0595-01		
2	2	2	2	B1	TYRE	111-0114-01		
2	2	2	2	A	WHEEL CENTRE	111-0115-01		
4	4	4	4	04	ASSEMBLY OF WHEELSET TRAILER	5030368-04	COMPRISING OF ITEMS A-C, & ADDX	
			-	03	ASSEMBLY OF WHEELSET TRAILER	5030368-03	COMPRISING OF ITEMS A-C & DEGHJK	
		-	-	02	ASSEMBLY OF WHEELSET TRAILER	5030368-02	COMPRISING OF ITEMS A-C, E & K	
	-	-	-	01	ASSEMBLY OF WHEELSET TRAILER	5030368-01	COMPRISING OF ITEMS A-H	

BREL LIMITED

DATE	ORDER	SEE	NO. OF VEHICLES/BOGIES	NUMBERS	CLASS
					TS-156 TS-154

ISSUE	DATE	DRAWN	CHECK	ENGRS	APPV
D	15/5/90	DP	PD.B	TC	
C	[illegible]	[illegible]	[illegible]	HC	
B	[illegible]	[illegible]	[illegible]	[illegible]	
A	2-5-[illegible]	[illegible]	[illegible]	[illegible]	

TITLE

ASSEMBLY OF WHEELSET (POWER & TRAILER)

DWG NO. 5030368

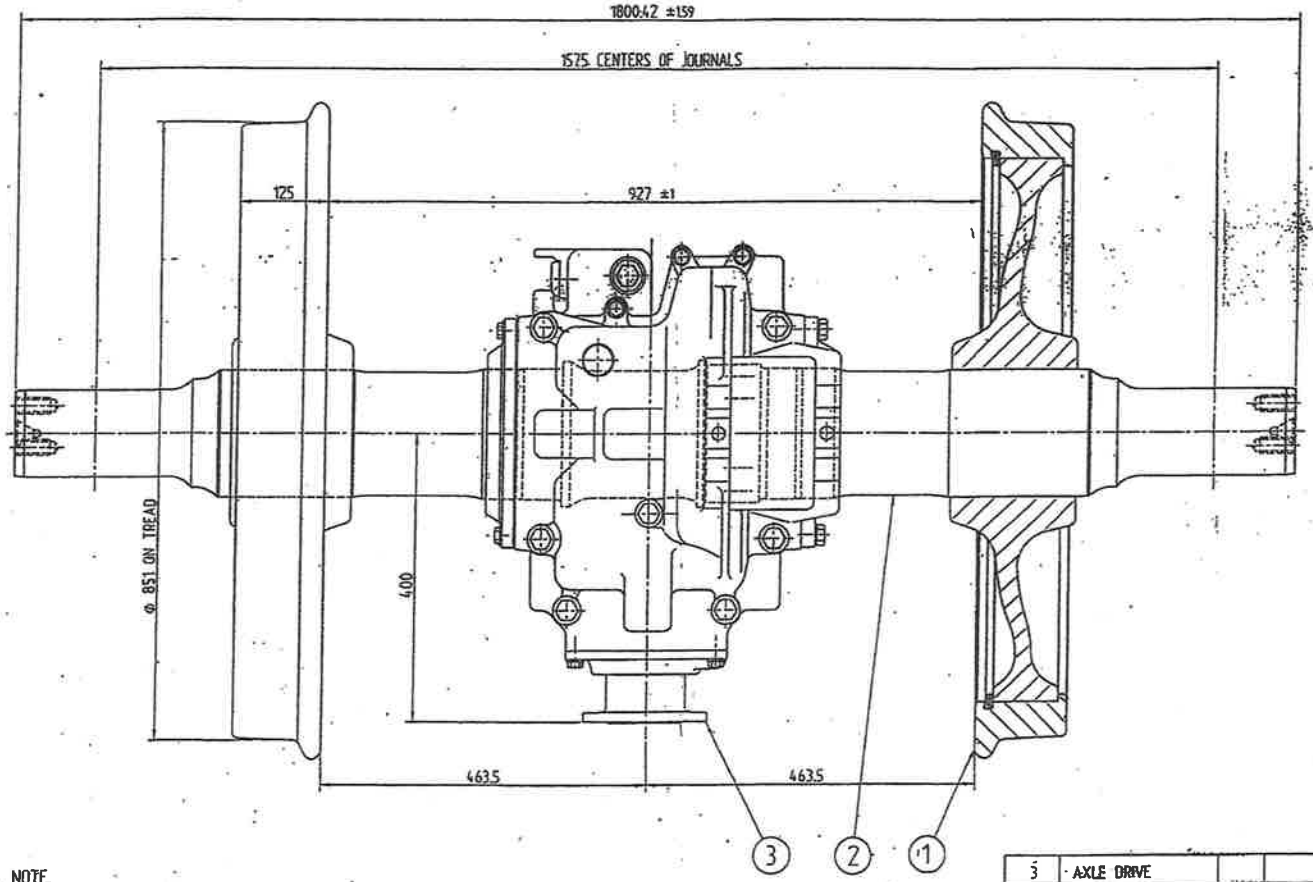

NOTE.

1. THE LIMIT OF THE PRESSING FORCE OF MOUNTING WHEELS ON AN AXLE SHALL BE FROM 70 TO 84 TONS (METRIC-TONNES)
2. VARIATION IN THE DIAMETER BETWEEN THE PAIR OF WHEELS IS NOT MORE THAN 1mm
3. THE STAMPING SHALL CONFORM TO DRAWING NO.TR210018

MARKS	NAME OF PARTS	No/SET	MATERIALS	TENSILE STRENGTH&ELONGATION	REMARK
3	AXLE DRIVE				TR310097
2	AXLE (DRIVING)				TR220012
1	WHEEL				TR210017

R S R.	WHEEL AND AXLE ASSEMBLY (DRIVING)	SCALES- 1/5 DIMENSION IN MM

USED FOR	REF DWG. Nº	
DIESEL RAILCARS	TR200013	APP ..... EMT SANCO. ..... SEM

REMARKS.-
20(Twenty) Air-conditioned Diesel Hydraulic Railcars
& 40(Forty) Air-conditioned Trailer Sleeping Railcars

DR. J.K. JON ___ DR. J.S. KWAK ___ CH. ___ DATE

A2

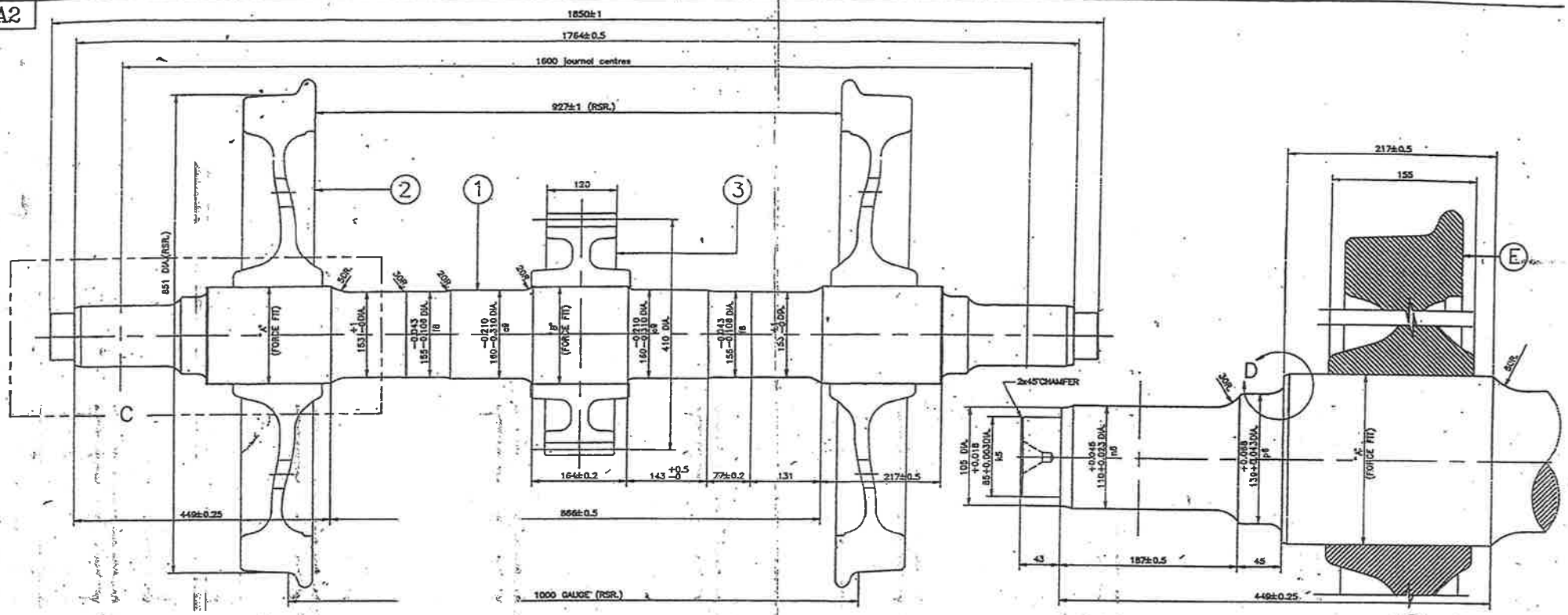

DETAIL AT (C)
1:3

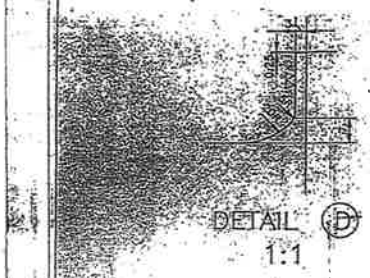

DETAIL (D)
1:1

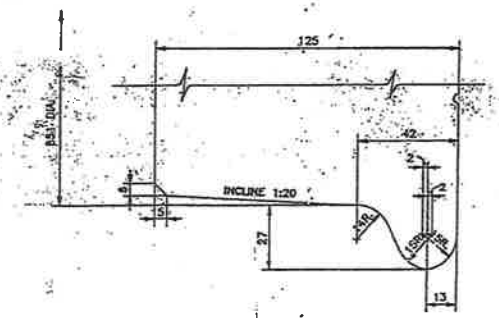

DETAIL AT (E)
WHEEL CONTOUR
1:1.5

หมายเหตุ
1) แผนผังนี้เสนอมิติการประกอบเพลาล้อ ที่จัดหาใหม่กับล้อและเฟืองขับที่ถอดจากเพลาเดิม JR-VEST ของเดิม
2) เพลาที่จัดหาใหม่ตามแผนผังนี้สามารถประกอบใช้งานกับล้อตามมาตรฐานของการรถไฟได้ด้วย

แคร่แบบ (BOGIE TYPE)	มิติเป็นมิลลิเมตร "A"	"B"
DT 22A	167DIA.	168DIA.
DT 22C	175DIA.	176DIA.

MARKS	NAME OF PARTS	NO/SET	MATERIALS	TENSILE STRENGTH&ELONGATION	REMARKS
③	REVERSING GEAR	1	S45C		
②	WHEELS	2	ASS'Y		JR-WEST
①	AXLE	1	AXLE STEEL	RSR.SPEC. No.SM10/2503/1 55-63kgs/mm & 22-18%min	LASTEST REVISION OR RSR. APPROVED EQ'T.

△ = HAND FINISHED ▽ = ROUGH MACHINED ▽▽ = FINISHED MACHINED ▽▽▽ = FINE FINISHED WORKED ○ = GROUND SURFACE

RSR.

WHEELS & AXLE REGAUGING

SCALES 1:1,1:1.5,1:3,1:5

DIMENSIONS IN mm

USED FOR	REF. DWG. No.
BOGIE TYPE DT22A,DT22C (DRIVING WHEELS) JR-WEST DIESEL RAILCARS KIHA 28 & KIHA 58	JR-W DWG.NO. D04663 JRW-DR2-0008

REMARKS: จัดทำขึ้นตามบันทึก ญทง. ลงวันที่23พ.ย.41 ท้ายบันทึกกองซ่อมบำรุงรถดีเซลรางแขกรุงเทพ เลขที่ วซร.238/ว.44/2541 ลงวันที่ 27พ.ย.41

APP ____ EMT.

SANCD. ____ SEM.

DR. ____ CH. ____ CH. ____

DATE 18/12/42

JRW-DR2-0009

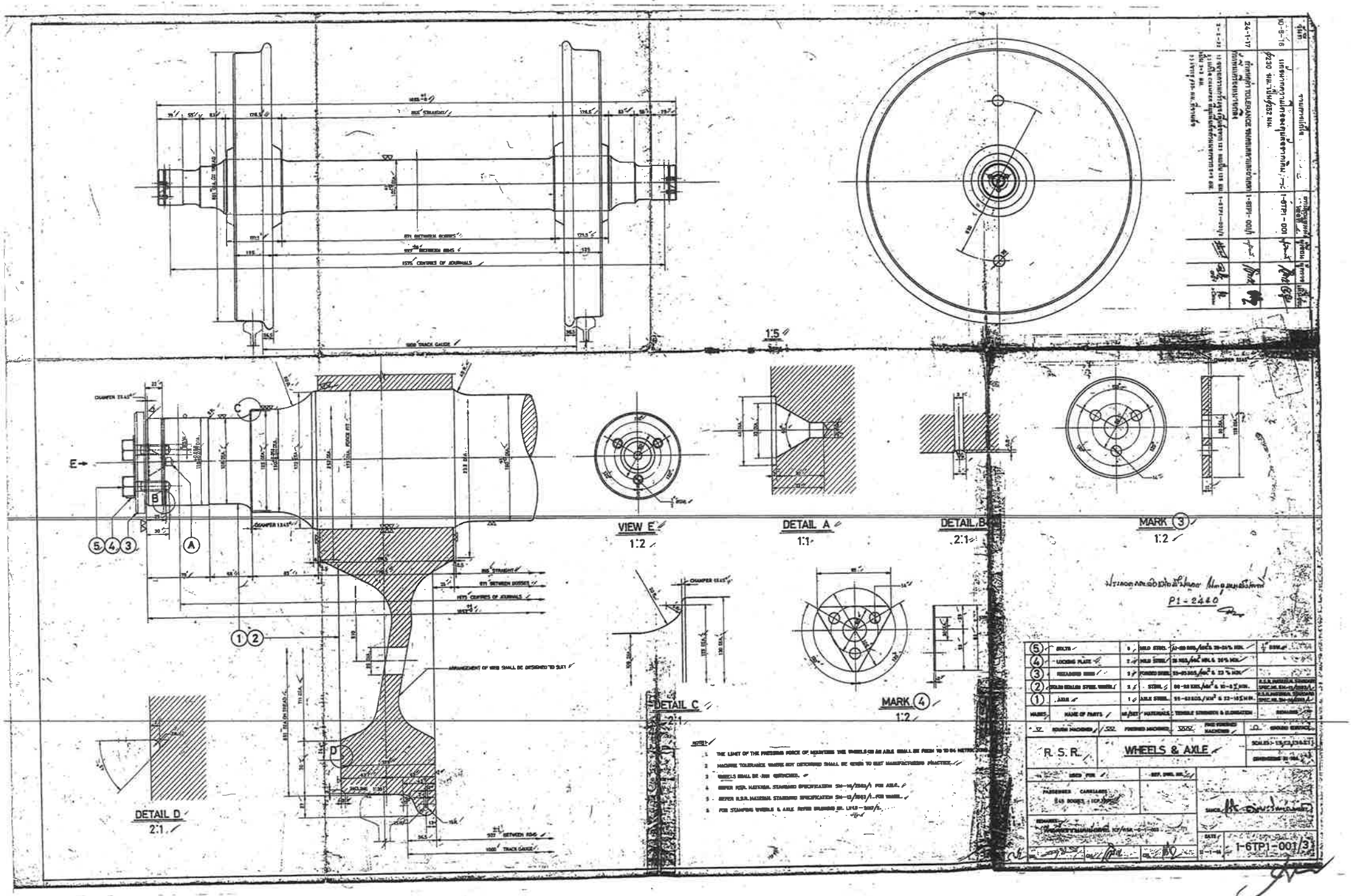
1:5
VIEW E
1:2
DETAIL A
1:1
DETAIL B
2:1
MARK 3
1:2
DETAIL C
2:1
MARK 4
1:2
DETAIL D
2:1
R. S. R.
WHEELS & AXLE
1-6TP1-001/3

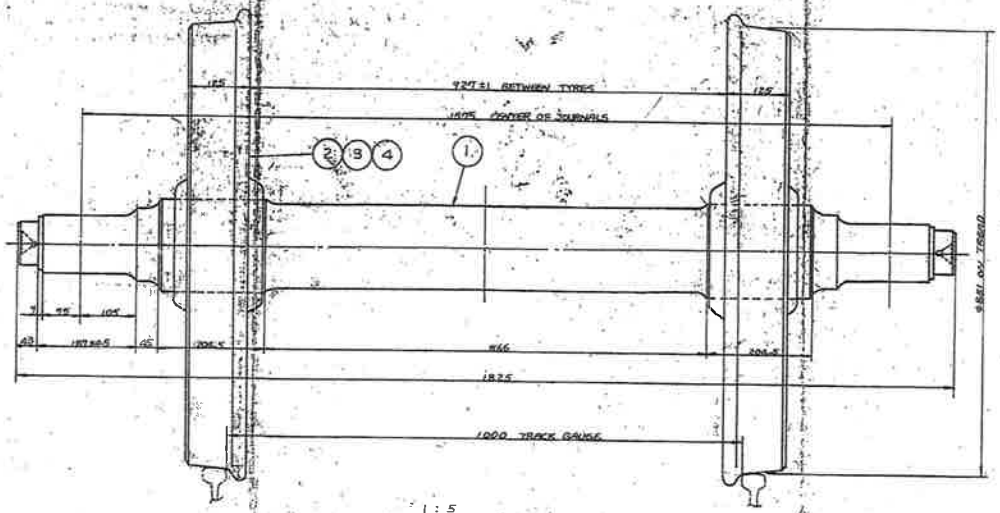

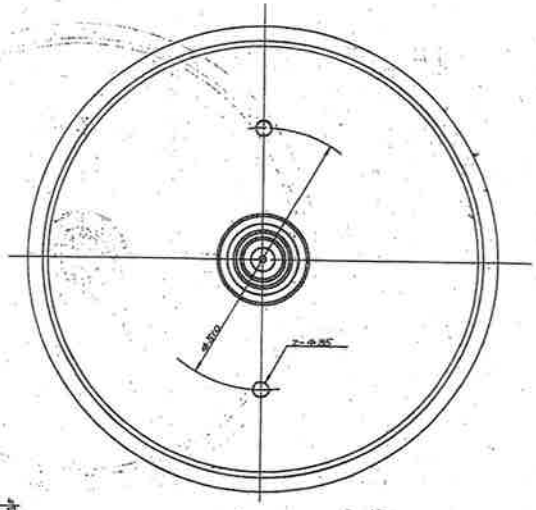

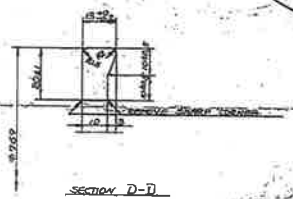

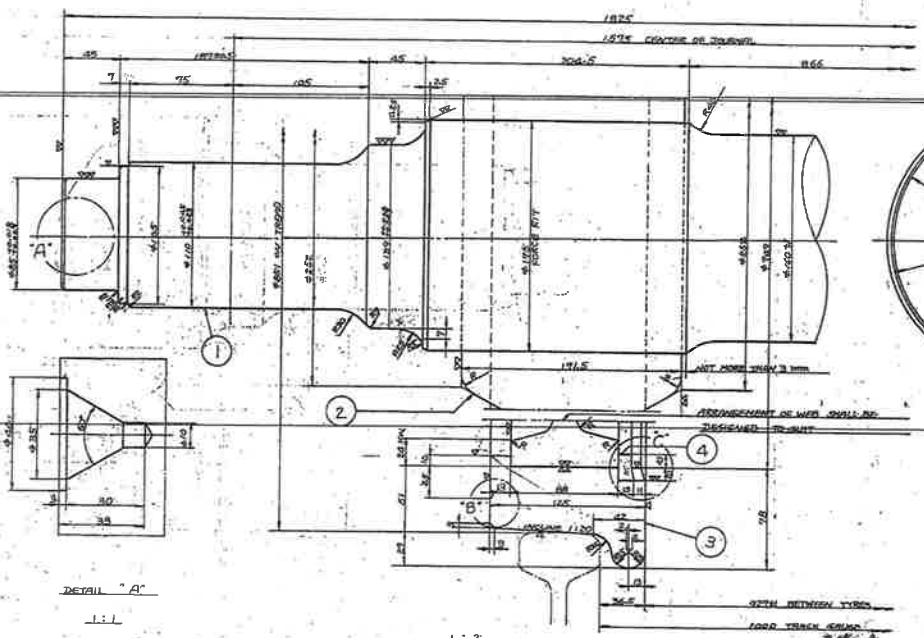

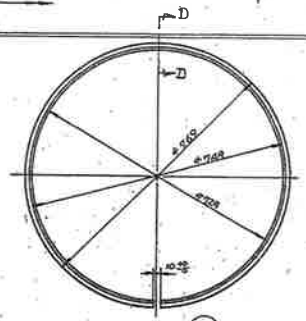

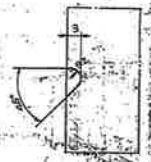

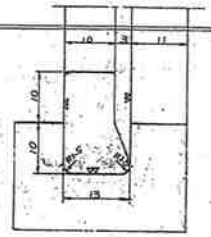

NOTE:

1. THE LIMIT OF PRESSING FORCE OF MOUNTING WHEEL ON JAN AXLE SHALL BE FROM 70 TO 80 METRIC TONS.
2. MACHINE TOLERANCE WHERE NOT SPECIFIED SHALL BE GIVEN TO SUIT MANUFACTURING PRACTICE.
3. STAMPING FOR IDENTIFICATION ON THE WHEELS AND AXLE SETS SHALL BE DONE TO R.S.R. DRAWING NO.

BOGIE TYPE KHM-L2-L2A

MARKS	NAME OF PARTS	NO./BOGIE	MATERIALS	TENSILE STRENGTH	ELONGATION	REMARKS
4	GIBSON RING	4	STEEL			
3	WHEEL TYRE	4	STEEL			04-11/2000
2	ROLLER BOX CENTER WEBS	4	STEEL			04-11/2000
1	AXLE	2	AXLE STEEL			04-11/2000

▽ ROUGH MACHINED ▽▽ FINISHED MACHINED

R.S.R.	WHEEL AND AXLE (AIR COND. & NON AIR COND.)	SCALE: 1:5 DIMENSIONS IN MM.
USED FOR	REF. DWG. NO.	
	MAKER: KOREA CO. KOREA	
REMARKS:	DWG. NO. 01-13-03-03-35	SANCTD. DATE

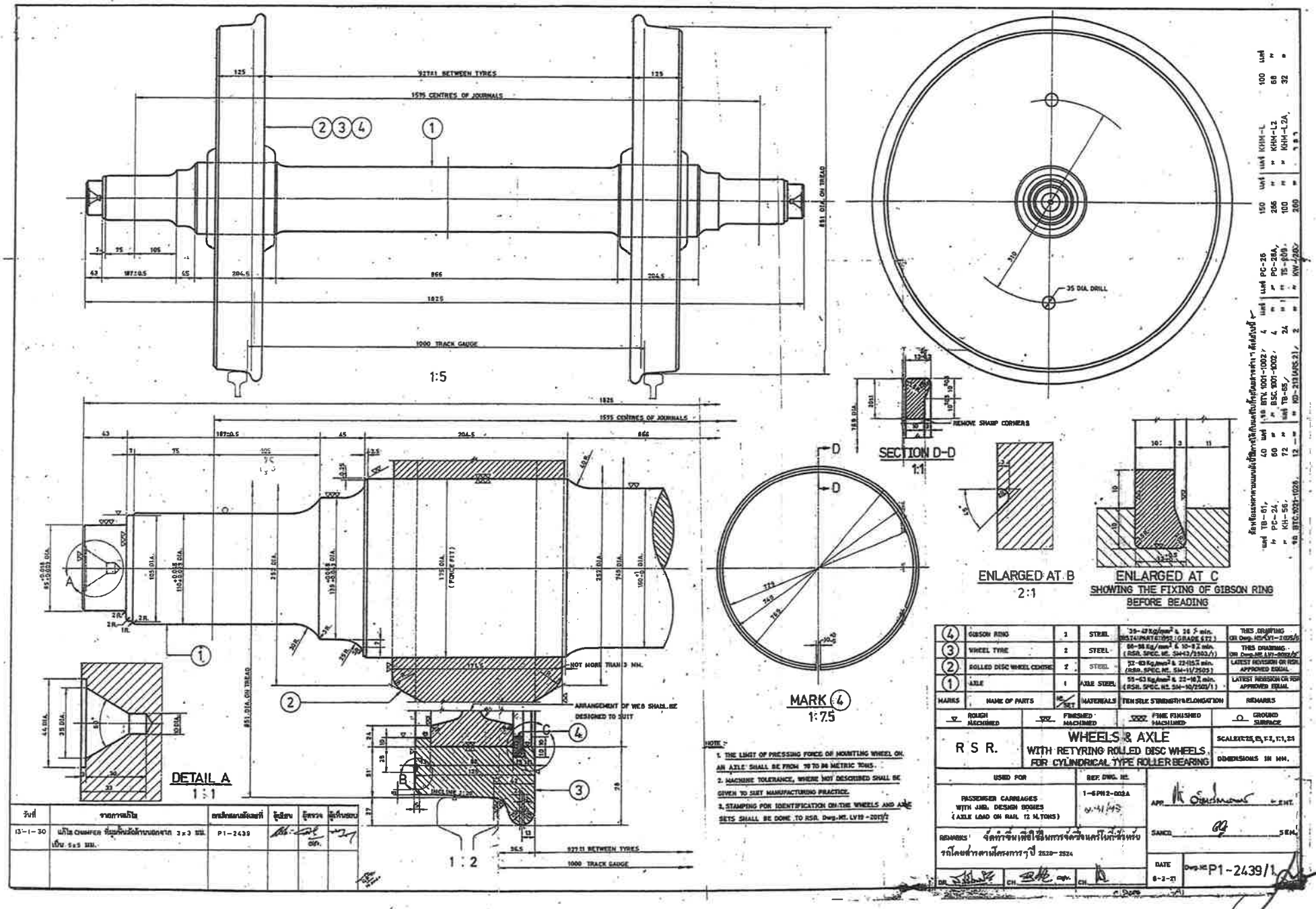
1:5
1575 CENTRES OF JOURNALS
1000 TRACK GAUGE
1825
851 DIA. ON TREAD
35 DIA. DRILL
SECTION D-D
1:1
REMOVE SHARP CORNERS
ENLARGED AT B
2:1
ENLARGED AT C
SHOWING THE FIXING OF GIBSON RING
BEFORE BEADING
MARK 4
1:7.5
DETAIL A
1:1
1:2
NOT MORE THAN 3 MM.
ARRANGEMENT OF WEB SHALL BE
DESIGNED TO SUIT
NOTE :-
1. THE LIMIT OF PRESSING FORCE OF MOUNTING WHEEL ON AN AXLE SHALL BE FROM 70 TO 84 METRIC TONS.
2. MACHINE TOLERANCE, WHERE NOT DESCRIBED SHALL BE GIVEN TO SUIT MANUFACTURING PRACTICE.
3. STAMPING FOR IDENTIFICATION ON THE WHEELS AND AXLE SETS SHALL BE DONE TO RSR. Dwg.NO. LV19-2013/2
4 GIBSON RING 2 STEEL 38-47 kg/mm² & 26 % min. (BS.1449/PART 1:1972 : GRADE 43) THIS DRAWING
3 WHEEL TYRE 2 STEEL 66-86 kg/mm² & 10-8 % min. (RSR. SPEC. NO. SM-13/2503/1) THIS DRAWING
2 ROLLED DISC WHEEL CENTRE 2 STEEL 52-63 kg/mm² & 22-15 % min. (RSR. SPEC. NO. SM-11/2503) LATEST REVISION OF RSR. APPROVED EQUAL
1 AXLE 1 AXLE STEEL 55-63 kg/mm² & 22-18 % min. (RSR. SPEC. NO. SM-10/2503/1) LATEST REVISION OF RSR. APPROVED EQUAL
MARKS NAME OF PARTS NO./SET MATERIALS TENSILE STRENGTH & ELONGATION REMARKS
ROUGH MACHINED
FINISHED MACHINED
FINE FINISHED MACHINED
GROUND SURFACE
R S R.
WHEELS & AXLE
WITH RETYRING ROLLED DISC WHEELS
FOR CYLINDRICAL TYPE ROLLER BEARING
SCALE: 1:25, 1:5, 1:2, 1:1, 2:1
DIMENSIONS IN MM.
USED FOR
PASSENGER CARRIAGES
WITH JNR. DESIGN BOGIES
(AXLE LOAD ON RAIL 12 M.TONS)
REF. DWG. NO.
1-6PM2-003A
REMARKS : จัดทำขึ้นเพื่อใช้ในการจัดซื้อแกนล้อใหม่สำหรับรถโดยสารตามโครงการรุ่นปี 2520-2524
APP. ENT.
SANCD. SEM.
DATE 8-2-71
Dwg.NO. P1-2439/1
DR. CH. CH.
วันที่ รายการแก้ไข อนุมัติตามหนังสือเลขที่ ผู้เขียน ผู้ตรวจ ผู้เห็นชอบ
13-1-30 แก้ไข CHAMFER ที่ขอบล้อด้านนอกจาก 3x3 มม. เป็น 5x5 มม. P1-2439

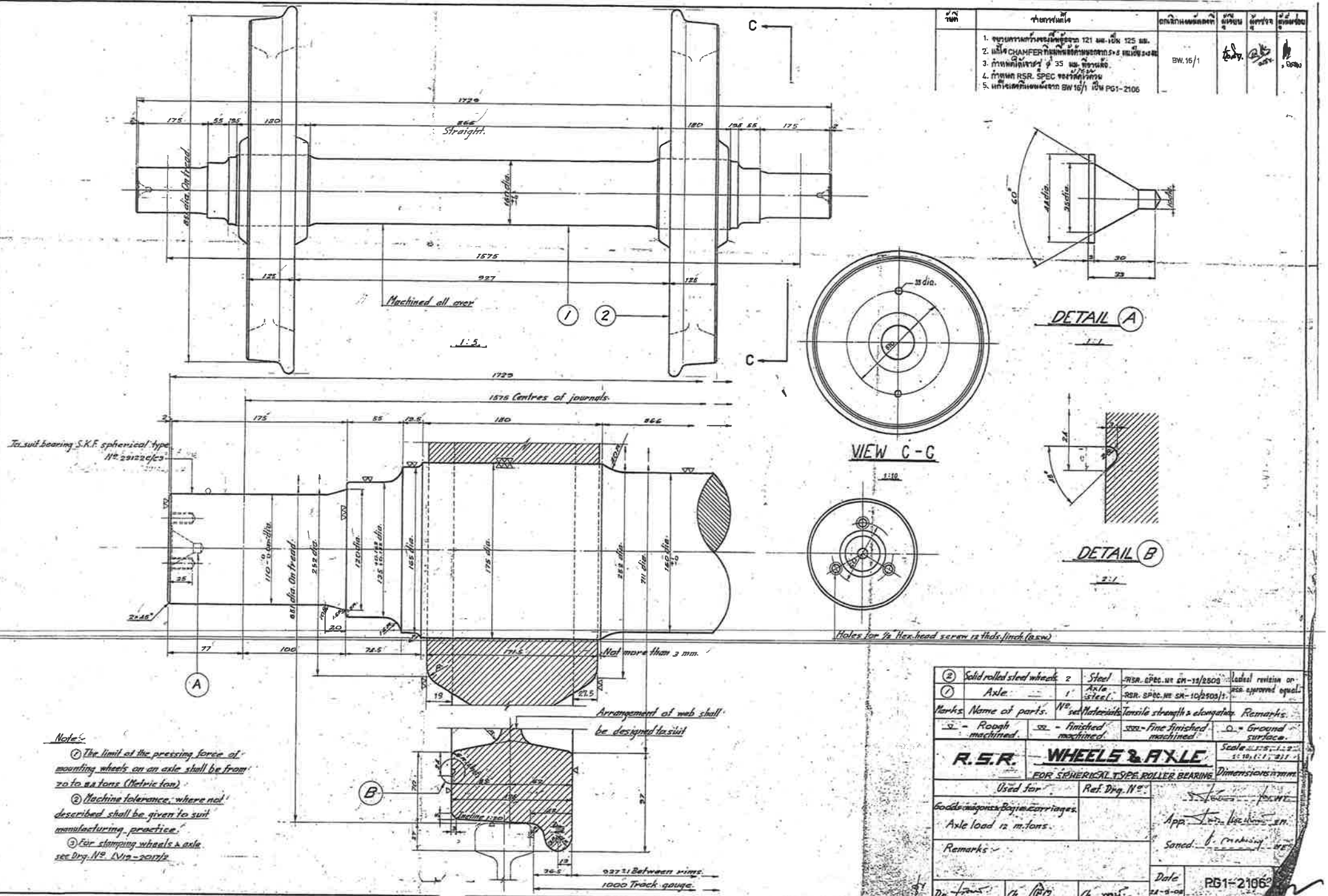

②	Solid rolled steel wheels	2	Steel	RSR. SPEC. No. SM-11/2503	Latest revision or RSR. approved equal.
①	Axle	1	Axle steel	RSR. SPEC. No. SM-10/2503/1	
Marks	Name of parts.	No. set	Materials	Tensile strength & elongation	Remarks.

▽ - Rough machined. ▽▽ - Finished machined. ▽▽▽ - Fine finished machined. ○ - Ground surface.

R.S.R. **WHEELS & AXLE** FOR SPHERICAL TYPE ROLLER BEARING

Scale 1:5, 1:2.5, 1:10, 1:1, 2:1

Dimensions in mm.

Used for: Goods wagons & Bogie carriages. Axle load 12 m. tons.

Ref. Drg. No.:

Remarks:

Dr. Ch. Ch.

App. Sanct.

Date 24-8-08

RG1-2106

BW 16/1

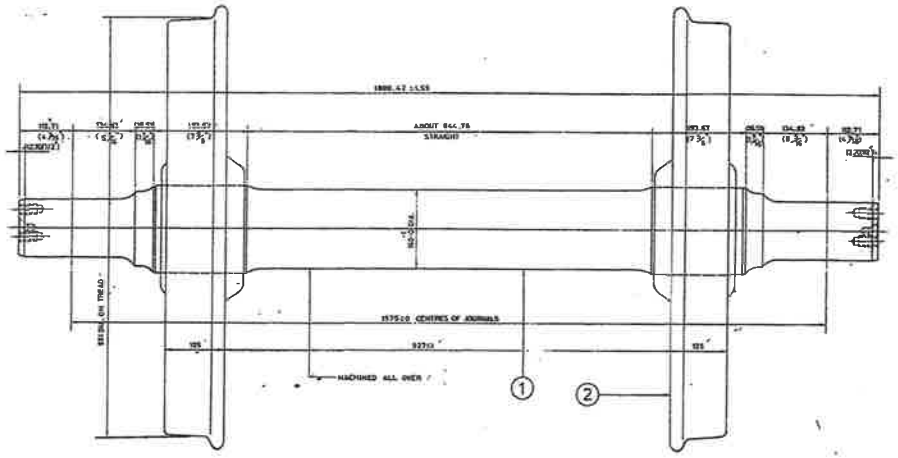

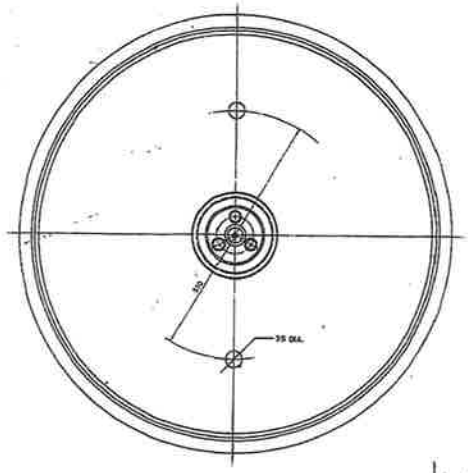

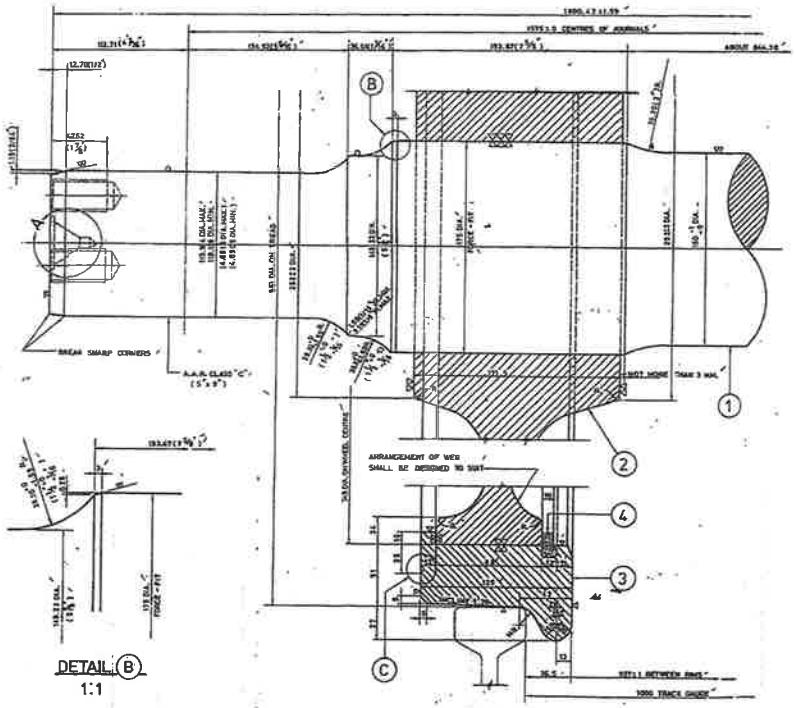

1:2

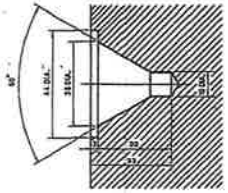

DETAIL (A)
1:1

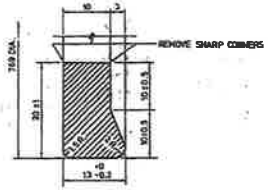

SECTION D-D
2:1

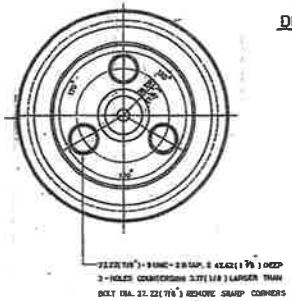

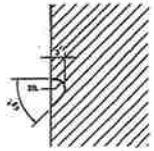

DETAIL (C)
2:1

NOTES:-

1. THE LIMIT OF THE PRESSING FORCE OF MOUNTING WHEELS ON AN AXLE SHALL BE FROM 70 TO 84 TONS(METRIC-TONNES)
2. THE STAMPING SHALL CONFORM TO THE RSR DRAWING NO LY 15-20072
3. VARIATION IN THE DIAMETER BETWEEN THE PAIR OF WHEELS NOT MORE THAN 1 MM.
4. MACHINE TOLERANCE, WHERE NOT DESCRIBED SHALL BE GIVEN TO SUIT MANUFACTURERS PRACTICE

DETAIL (B)
1:1

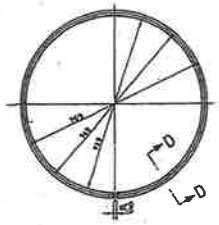

MARK (4)
1:10

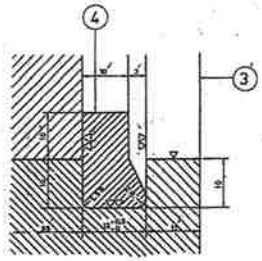

DETAIL SHOWING THE FIXING OF GIBSON RING BEFORE BEADING
2:1

(4)	GIBSON RING	2	MILD STEEL	39-47 KG/MM² & MIN. 20% (RSL.NO.7-20072; DEPT.GRADE E22)	THIS DRAWING FOR (RWL.NO.LY1-20072)
(3)	WHEEL TYRE	2	STEEL	68-78 KG/MM² & MIN. 16-8% (RSR.SPEC.NO.BM-13/2000/1)	THIS DRAWING FOR (RWL.NO.LY1-20072)
(2)	ROLLED DISC WHEEL CENTRE	2	STEEL	52-62KG/MM² & MIN. 22-25% (RSR.SPEC.NO.EM-31/2002)	THIS DRAWING
(1)	AXLE	1	AXLE STEEL	55-63 KG/MM² & MIN. 22-25% (RSR.SPEC.NO.EM-31/2002)	THIS DRAWING
MARKS	NAME OF PARTS	NO. OF SET	MATERIALS	TENSILE STRENGTHS ELONGATION	REMARKS

Finish: RAW FINISHED, F. = ROUGH MACHINED, FF. = FINISHED MACHINED, FFF. = FINE FINISHED MACHINED, G. = GRIND WHEELS

R.S.R.

WHEELS & AXLE (TYPE IV A P) WITH RETYRING ROLLED DISC WHEELS FOR ROLLER BEARING

SCALE: C1,C2,C3,C4,C5 — DIMENSIONS IN MM

USED FOR: CARRIAGES AND WAGONS (N.G. NOMS. NO.2, AXLE LOAD ON RAIL, A.A.R. STANDARD CLASS "C" 15"x9")

REF. DWG. NO. P2-1225

APPD.

DRAWN

DATE

REMARKS: สลักเพลาที่ใช้ยึดกับดอก JOURNAL ตาม A.A.R. STANDARD CLASS "C" (5"x9") ; ที่นี้ใช้ยกเพลาสำหรับการซ่อมบำรุง; และยังใช้สำหรับยึดเพลาสำหรับ 34 ตัน ที่ N.G.2525

A2

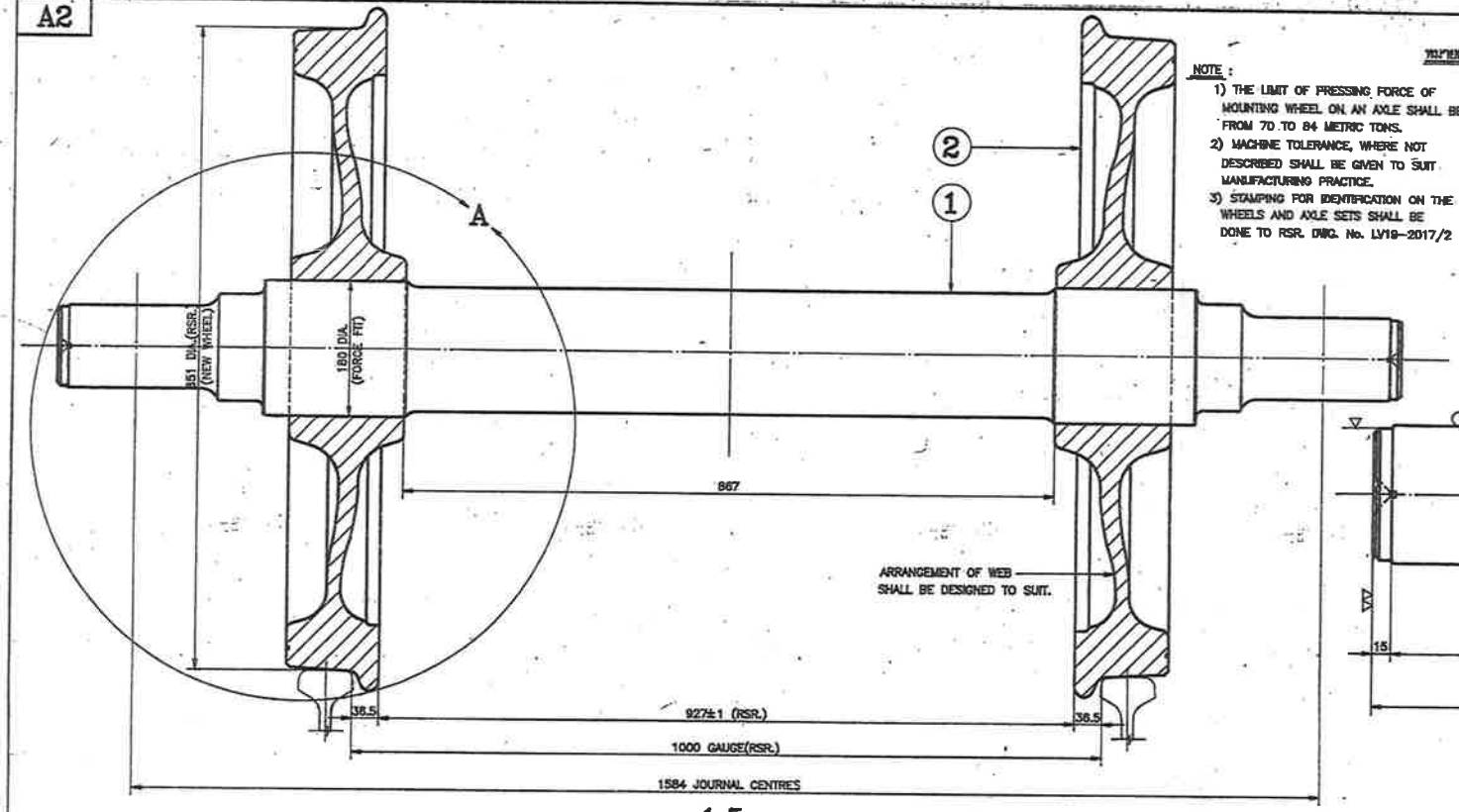

1:5

NOTE :

1) THE LIMIT OF PRESSING FORCE OF MOUNTING WHEEL ON AN AXLE SHALL BE FROM 70 TO 84 METRIC TONS.
2) MACHINE TOLERANCE, WHERE NOT DESCRIBED SHALL BE GIVEN TO SUIT MANUFACTURING PRACTICE.
3) STAMPING FOR IDENTIFICATION ON THE WHEELS AND AXLE SETS SHALL BE DONE TO RSR. DWG. No. LV19-2017/2

หมายเหตุ: การ REGAUGE ล้อพร้อมเพลาของแคร่รถโดยสาร JR-WEST จาก TRACK GAUGE 1,067 มม. เป็น 1,000 มม. ตามมาตราของ รฟท. โดยการเปลี่ยนแปลงตามเพลา (ดุมกระเดื่องใช้ของเดิม) ให้ดำเนินการดังนี้

1) จัดทำเพลาใหม่ตามแบบอ้าง เลขที่ JR-W1-002
2) จัดหับลูกกลิ้งและตามเพลาที่ใช้ของเดิมที่ติดตั้งมากับแคร่รถโดยสาร JR-WEST
3) กลึงเปลี่ยน CONTOUR ของหน้าล้อและปาดปีกใบจากเดิมเป็น VIDURA CONTOUR
4) ขนาดความยืดหยุ่นของวงล้อ (SOLID WHEEL) เมื่อกลึงเปลี่ยนเป็น VIDURA CONTOUR แล้วจะต้องอยู่ในขนาดมาตรฐานของ รฟท. คือ ล้อใหม่ ø 851 มม. กลึงครั้งสุดท้าย ø 781 มม. เลิกใช้การเมื่อ ø 767 มม.

สำหรับล้อที่บางครั้งมีความยืดไม่ได้ขนาดตามที่กำหนดให้ดำเนินการจัดทำเป็นล้อยนิดอัดปลอก ตามมาตรฐานของ รฟท.

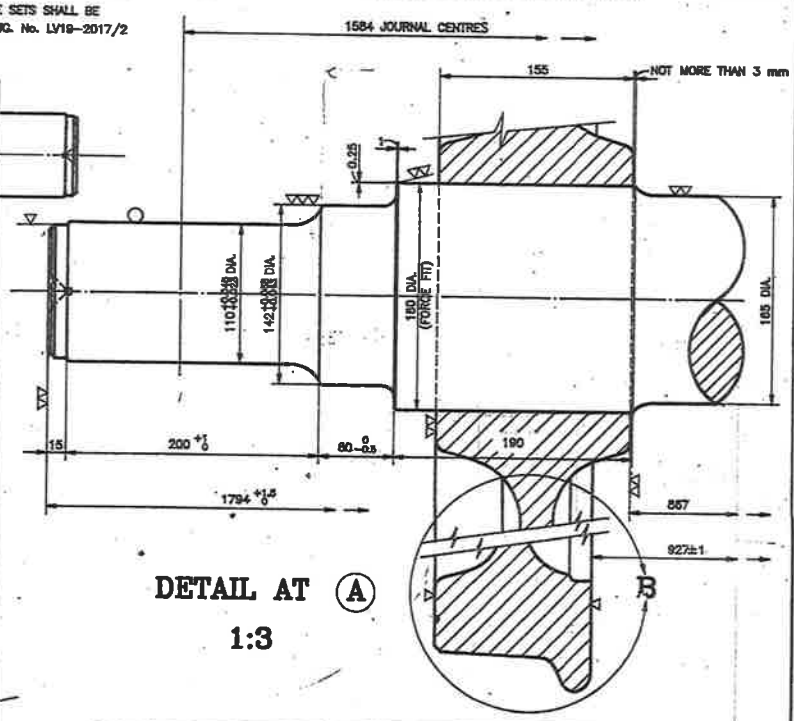

DETAIL AT (A)

1:3

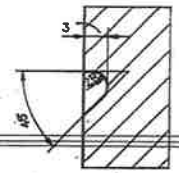

ENLARGED AT (C)

2:1

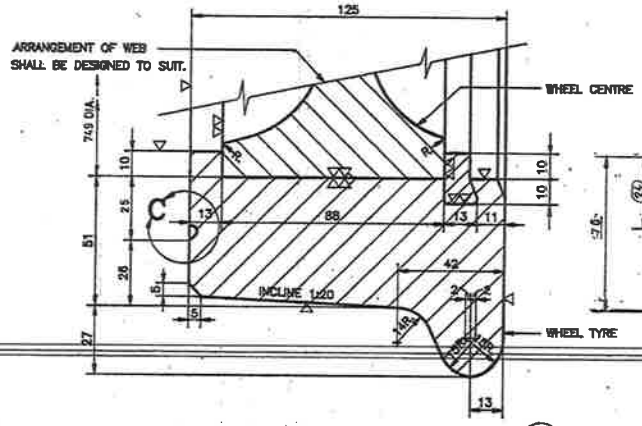

RETYRING WHEEL DETAIL AT (B)

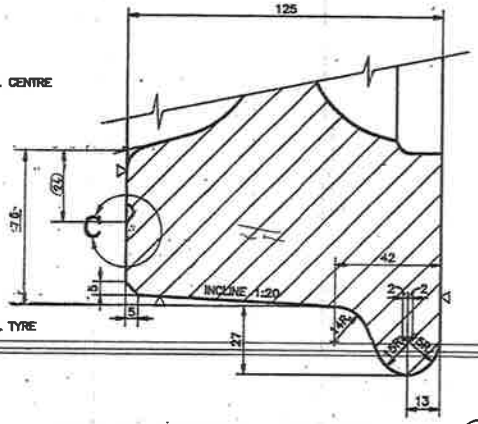

SOLID WHEEL DETAIL AT (B)

RSR.CONTOUR (VIDURA CONTOUR)

1:1.5

(2)	RETYRING WHEEL	2			RSR. DWG.No. P1-2439/1
	SOLID WHEELS				JR-WEST DWG.No.VD1-6780
(1)	AXLE	1			RSR. DWG.No.JR-W1-002
MARKS	NAME OF PARTS	No./SET	MATERIALS	TENSILE STRENGTH&ELONGATION	REMARKS

= HAND FINISHED ▽ = ROUGH MACHINED ▽▽ = FINISHED MACHINED ▽▽▽ = FINE FINISHED MACHINED Ω = GROUND SURFACE

RSR.

WHEELS & AXLE

SCALES 1:1.5,1:3,1:5,2:1

DIMENSIONS IN mm

USED FOR	REF. DWG. No.
JR-WEST CARS DONATED FOR RSR.	VC 4509 VC 4510 VD 4780 (JR WEST)

APP. _____ EMT.

SANCD. _____ SEM.

REMARKS: แบบนี้จัดทำขึ้นเพื่อใช้ในการจัดทำเพื่อการ REGAUGE ล้อพร้อมเพลา สำหรับรถโดยสาร JR-WEST

DR. _____ CH. _____ CH. _____

DATE 29/8/41

JR-W1-001

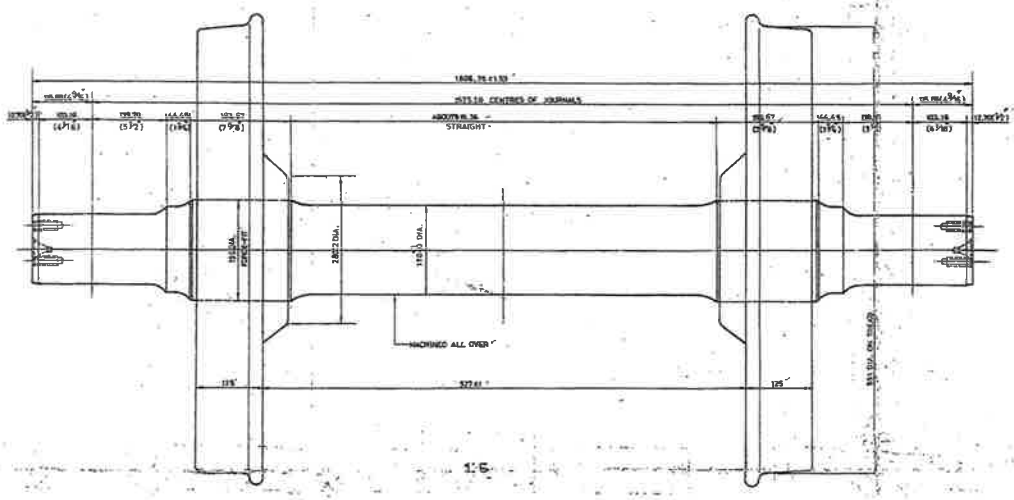

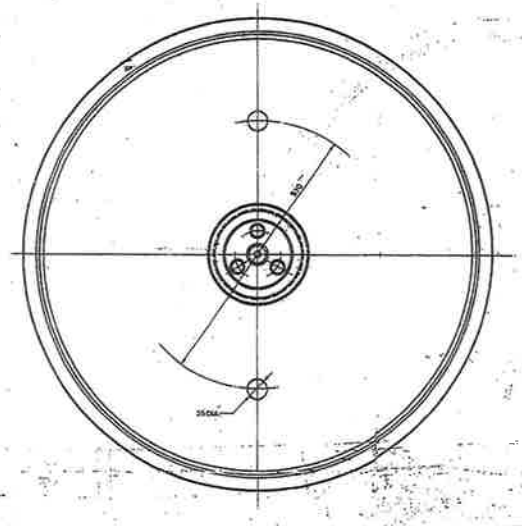

ล้อพร้อมแบริ่งตามแบบหมายเลข ที่ ซึ่งจะมีติดกับแคร่โบกี้รถสินค้าสำหรับบำรุงทางรถไฟ บรรจุ สูงสุด 15 เมตริกตัน ดังนี้ :-

- แคร่ BARBER STABILIZED BOGIE :-

บรรทุก	158	ตัน
บรรทุก	60	"
บรรทุก	20	"
บรรทุก	40	"
บรรทุก	60	"
แคร่ตัวรอง	40	แคร่

- แคร่ KHM.A-3 RIDE CONTROL BOGIE :-

บรรทุก	72	ตัน

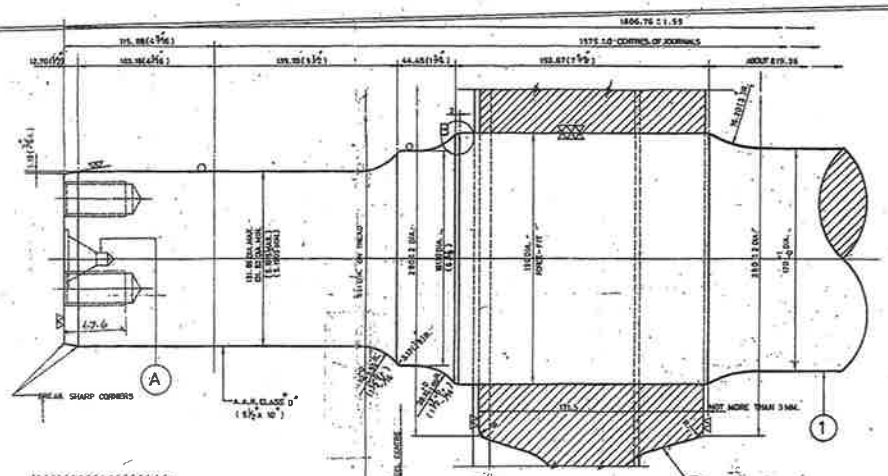

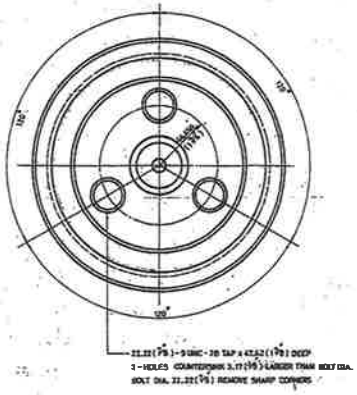

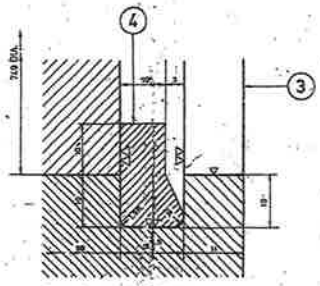

DETAIL SHOWING THE FIXING OF GIBSON RING BEFORE BEARING
2:1

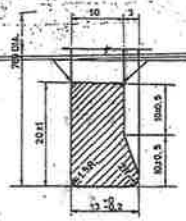

SECTION D-D
2:1

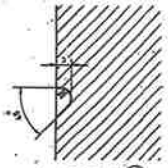

DETAIL C
2:1

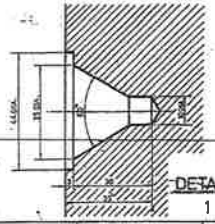

DETAIL A
1:1

DETAIL B
1:1

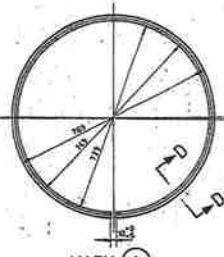

MARK 4
1:10

FOR GUIDANCE ONLY

4	GIBSON RING	2	MILD STEEL	28-47 KG/MM² & MIN. 25% (BS.31:PART3, BTS.GRADE 32)	THIS DRAWING OR DWG. NO. LM-1005/5
3	WHEEL TYRE	2	STEEL	68-88 KG/MM² MIN. 10-8% (KNA.SPEC.NO.SAL-10/2503(1))	THIS DRAWING OR DWG.NO. — 2003(2)
2	ROLLED DISC WHEEL CENTRE	2	STEEL	52-63 KG/MM² MIN. 23-18% (KNA.SPEC.NO.SAL-10/2503)	THIS DRAWING
1	AXLE	1	AXLE STEEL	58-63 KG/MM² MIN. 22-18% (KNA.SPEC.NO.SAL-10/2503(1))	THIS DRAWING
MARKS	NAME OF PARTS	NO. PER SET	MATERIALS	TENSILE STRENGTH & ELONGATION	REMARKS

▽ = ROUGH MACHINED ▽▽ = FINISHED MACHINED ▽▽▽ = FINE FINISHED MACHINED ▽▽▽▽ = GROUND SURFACE ▽▽▽▽▽ = WELL FINISHED

R S R.

WHEELS & AXLE (TYPE V AP)
WITH RETYRING ROLLED DISC WHEELS FOR ROLLER BEARING

SCALE: 1:1, 1:2, 1:6, 1:10, 2:1 — DIMENSIONS IN MM.

USED FOR: BOGIE GOODS WAGONS (15 M.TONS MAX. AXLE LOAD ON RAIL, AAR. STANDARD CLASS. "D" 5½"x10")

REF. DWG. NO: 8-31/13/162

REMARKS: เพื่อจะสามารถใช้งานกำหนดเดือนตามกำหนดกำหนดการ ยกเว้นเท่า - ดีเท่ากัน

DATE: 15-4-24 — G1 - 2257 / 1

วันที่	รายการแก้ไข	เลขที่เอกสารอ้างอิง	ผู้เขียน	ผู้ตรวจ	ผู้อนุมัติ
15-1-30	เพิ่ม CHAMFER ที่มุมขึ้นขอบด้านนอกขาว 3 x 3 มม. เป็น 5 x 5 มม. และเพิ่มความหนาที่มุมของ WHEEL - CENTRE จาก 21 มม.เป็น 24 มม.	G1-2257			

A2

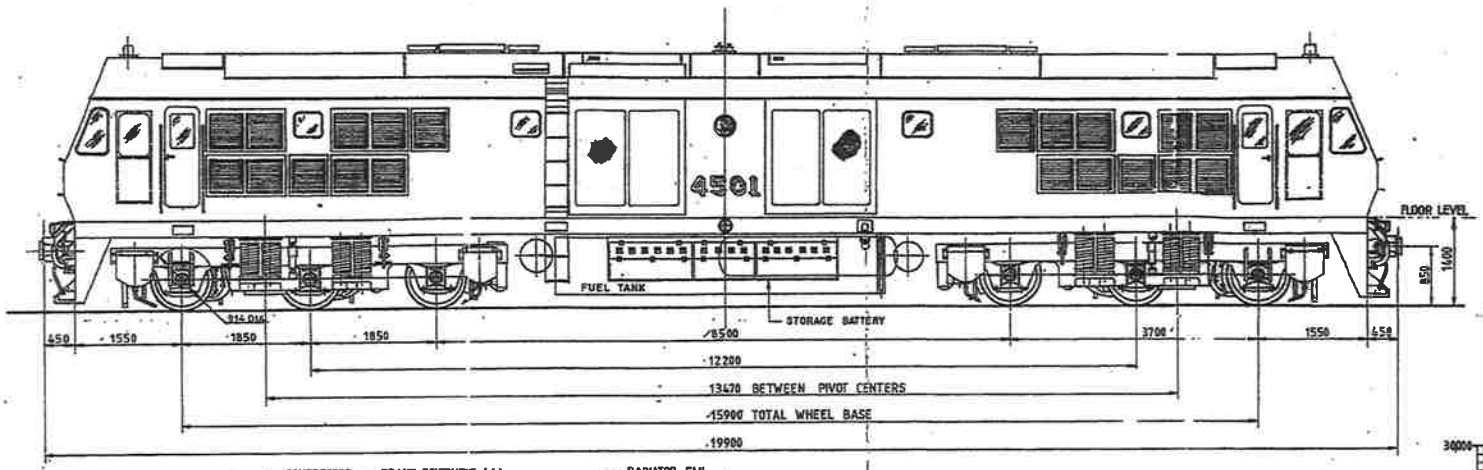

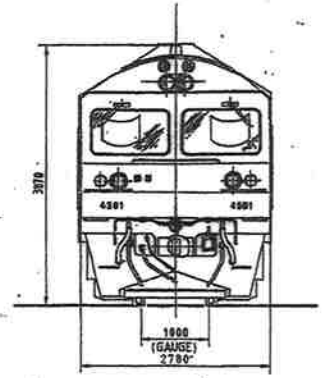

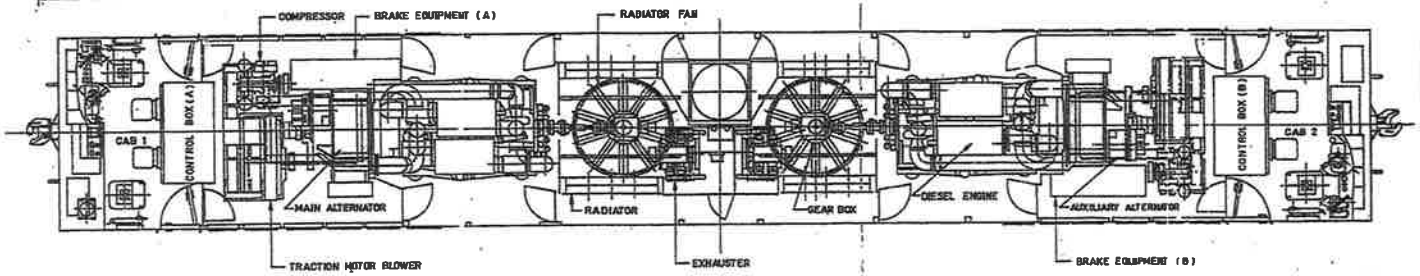

TRACTIVE EFFORT – SPEED CURVE

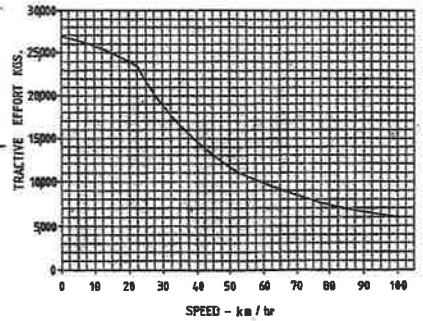

YEAR, LOCOMOTIVE IN SERVICE (B.E.)	2536 (1993)	TRACTION MOTOR	
WEIGHT OF LOCOMOTIVE		NUMBER OF UNIT	6
IN WORKING ORDER	90 TONS	TYPE	HS. 21241-01R
EMPTY	84.5 TONS	NUMBER OF POLES	4
WHEEL ARRANGEMENT	Co–Co	CONTINUOUS RATING & RPM.	263KW,655V,645A,785 RPM.
MAXIMUM AXLE LOAD	15 TONS	MAXIMUM SPEED	3,860 RPM. / MIN.
CAPACITY (PER LOCOMOTIVE)		GEAR RATIO	73 : 18
FUEL	5,000 LITERS	MAIN ALTERNATOR	
LUBRICATING ENGINE OIL	2×215 LITERS	NUMBER OF UNIT	2
COOLING WATER	2×375 LITERS	TYPE (YEFC$_1$0)	SELF VENTILATED
SAND	500 LITERS	NUMBER OF POLES	–
LOCOMOTIVE OUT PUT		NOMINAL RATING & RPM.	950KVA,360V,1524 A,1800 RPM.
MIN.CONTINUOUS RATED TRACTIVE EFFORT	11,700 KGS.	HIGHT VOLTAGE	590 V.
MIN.CONTINUOUS RATED SPEED	32.1 km/hr	BRAKING (WESTINGHOUSE)	
MAXIMUM TRACTIVE EFFORT AT 30% ADHESION	27,000 KGS.	TYPE OF BRAKE ON LOCOMOTIVE (28-LAAV-1)	COMBINED AIR AND VACUUM BRAKE, AND DYNAMIC BRAKE
MAXIMUM SPEED	100 km/hr	CAPACITY OF VACUUM BRAKE (SWEPT VOLUME)	2×6700 L/MIN. AT 1,800 RPM.
DIESEL ENGINE		CAPACITY OF AIR COMPRESSOR (" ")	2×3200 L/MIN. AT 1,800 RPM.
MAKER AND TYPE (CUMMINS, UK.)	KTTA-50-L	BRAKE POWER PERCENTAGE	
NUMBER OF ENGINE	2	BATTERIES (TYPE LEAD ACID BATTERY)	
CYLINDER × BORE × STROKE	16V×159mm×159mm	VOLTAGE	64 VOLTS, 32 CELLS
MAXIMUM OUT PUT & RPM. (HP.)	2×1430 HP. AT 1800 RPM.	CAPACITY	175 AH. AT 5hr
		NUMBER OF LOCOMOTIVE ON ORDER	22 UNITS
		MINIMUM CURVE RADIUS NEGOTIABLE	122 M.

2900 PS. DIESEL ELECTRIC LOCOMOTIVE		SCALE: 1:50
		DIMENSIONS IN mm
	REF DWG. No.	
DEL. No. 4501 – 4522 (HITACHI)		SANCO. SER.
REMARKS: เลียนแบบจากแบบอันดับที่ 313 – 3A200679 ของบริษัท HITACHI แต่ได้ดัดแปลงตามการใช้งานที่เหมาะสม		DATE 29/4/37
DR. CH. CH.		DIAGRAM No. D23

REF. NO	DESCRIPTION	MATERIAL	PCS / SET	XGS / PCS	REMARKS

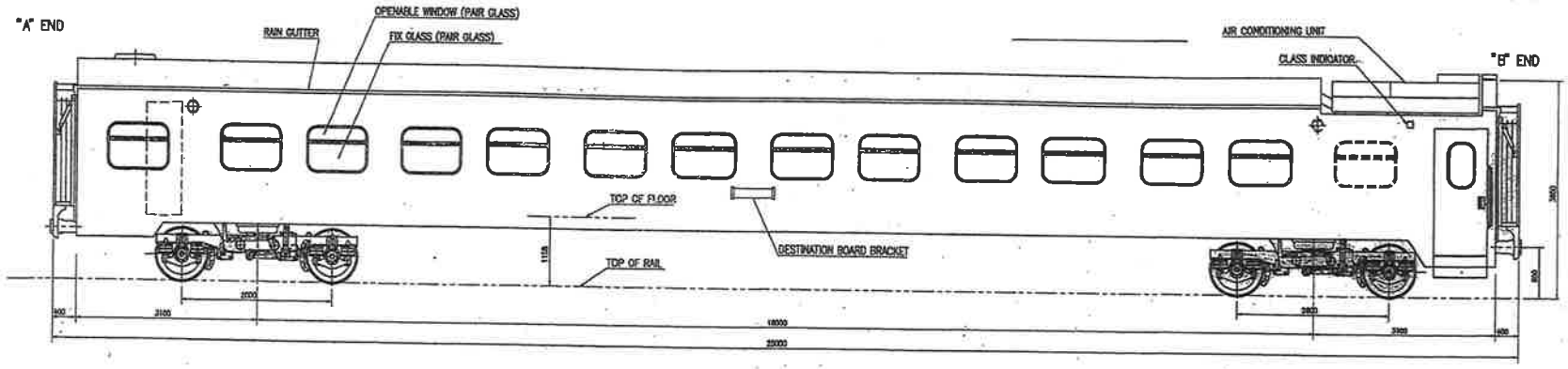

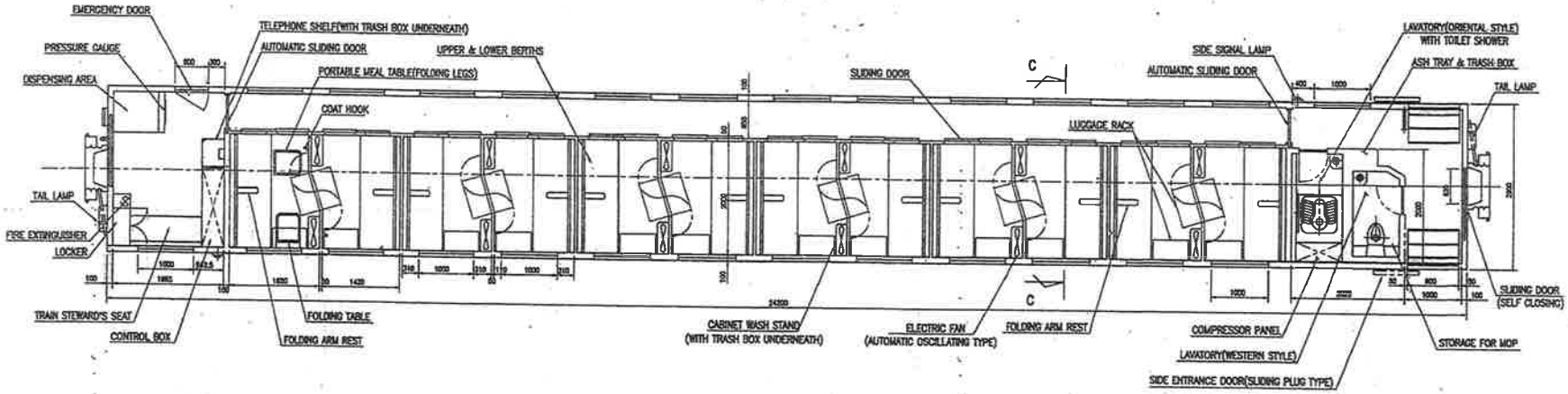

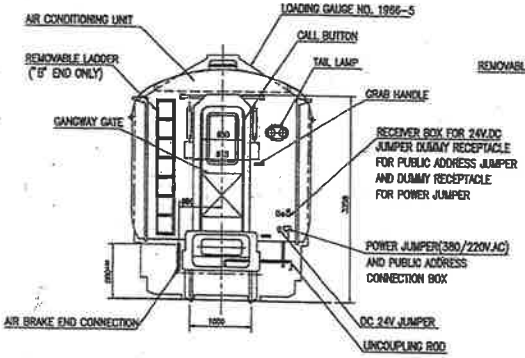

VIEW "B" END

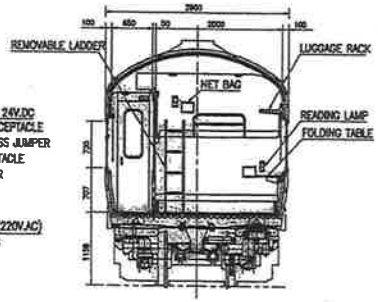

SECTION C-C

PASSENGER CAPACITY	TARE WEIGHT	BRAKE SYSTEM	COUPLER	DRAFT GEAR	WHEEL & AXLE	ENGINE		ALTERNATOR	
						MODEL	POWER	MODEL	POWER
24 PERSONS	39.5±5% TONS	AUTOMATIC AIR BRAKE WITH PARKING BRAKE	AAR "E" TYPE	MF-491C-4 TYPE RUBBER CUSHION DRAFT GEAR	851mm DIA ON TREAD AXLE JOURNAL OF 5"x9" NOMINAL	1006-6TG	80 KVA	BET-100	80 KVA & 120 A

R. S. R	GENERAL ARRANGEMENT OF AIR CONDITIONED FIRST CLASS DAY AND NIGHT COACH		SCALE 1/40 DIMENSIONS IN MM
USED FOR		REF. DWG. NO.	
BBB ANF 1001-1022		R3C700805	APP.
REMARKS : CONTRACT NO. 4692, CONTRACT DATE JULY 17, 1995			SANCO.
MAKER : HYUNDAI PRECISION & INDUSTRY CO., LTD.			DATE
DR. J.Y. LEE	CH. B.S. KIM	CH. H.H. [illegible]	I-4ANF3-002

A3S

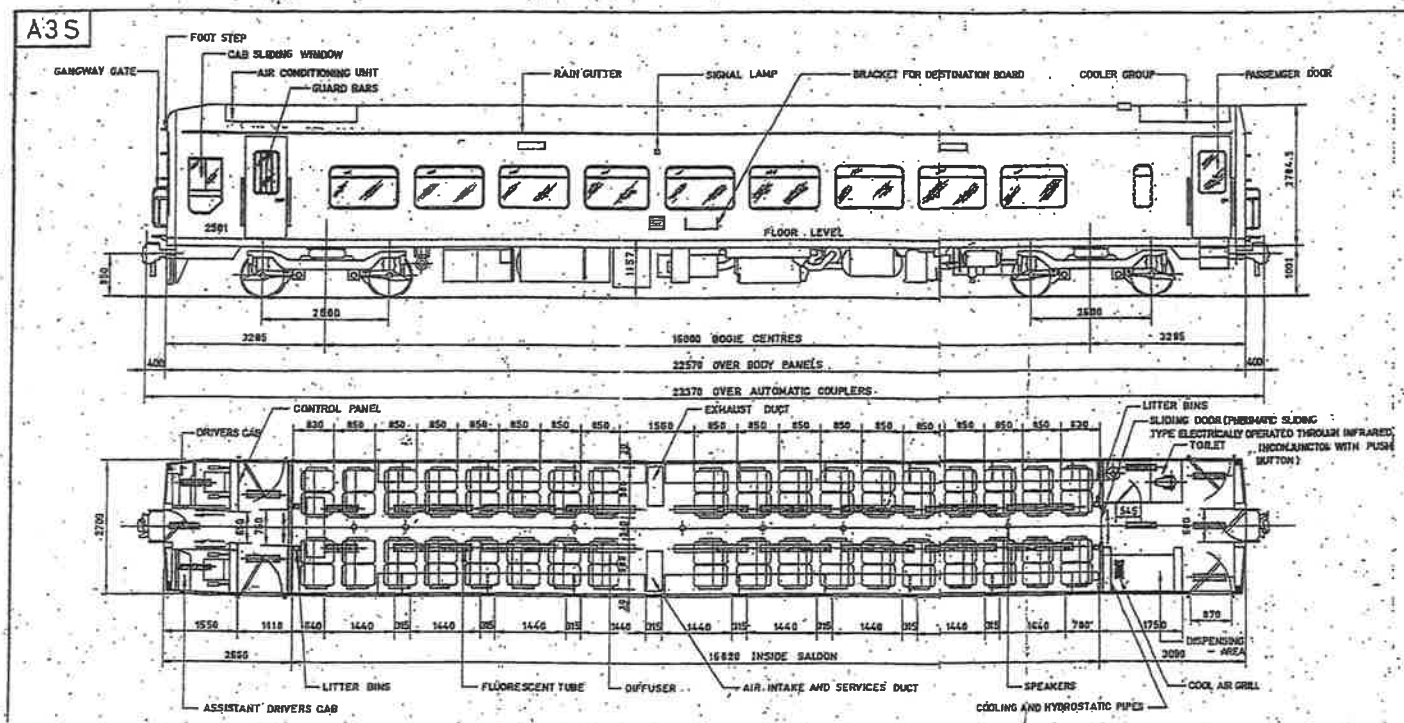

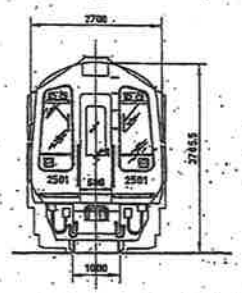

YEAR IN SERVICE	2534 (1991)	MAXIMUM OUT PUT @ SPEED	285 hp @ 2100 rpm	NEW	851 mm
NUMBER OF CARS ON ORDER	12 CARS	IDLING SPEED	MIN. 770, MAX. 790 rpm	WORN OFF	799 mm
WEIGHT OF POWER CAR		FIRING ORDER	1-5-3-6-2-4	DONKEY ENGINE	4 STROKE, VERT CAL
IN WORKING ORDER (APPROX)	38906 kg	HYDRAULIC TRANSMISSION, TYPE	TC, VOITH T 211 RZ	MAKER AND TYPE	CUMMINS 6 B 5.9
EMPTY (APPROX)	37090 kg	NUMBER OF CONVERTER FOR EACH DRIVING DIRECTION	1	NUMBER OF ENGINE	1
WHEEL ARRANGEMENT (TYPE)	BOGIE (DREL T3, VARIANT)	AXLE DRIVE (TYPE GH 190 EH/310D)	1	CYLINDER × BORE × STROKE	6 × 102 mm × 120 mm
MAXIMUM AXLE LOAD	12 TONS	REDUCTION RATIO	—	ASPIRATION	NATURALLY ASPIRATED
CAPACITY / ENGINE		STARTER (DELCO REMY)	MODEL 1998378, 24 V	MAXIMUM OUTPUT @ SPEED	80 hp @ 1500 rpm
HYDRAULIC TRANSMISSION OIL	78 l	ALTERNATOR (MAIN ENGINE) 1,2	LUCAS CAV	COMBUSTION TYPE	DIRECT-INJECTION
HYDRAULIC COUPLING OIL FOR THE COOLING FANS	58 l	3-φ ALTERNATOR WITH BRIDGE RECTIFIER	TYPE AC 283/880/24-4	3 φ ALTERNATOR MAKER & TYPE	MECC ALTE STA & SMART 24 LC
FUEL	1500 l	NORMINAL OUTPUT VOLTAGE & CURRENT	24 V, 80 A	OUTPUT VOLTAGE & CURRENT	380 V AC & 75.3 A
LUBRICATING ENGINE OIL	*M 43, D 14 l	LIGHTING CIRCUIT	220 V AC	FREQUENCY	50 Hz
COOLING WATER	*M 300-15, D 30-15	BATTERY	LEAD ACID TYPE TRE 10-6	AIR CONDITIONING UNIT, MAKER AND TYPE	WESTINGHOUSE, ROOF MOUNTED TYPE
SAND / CAR	—	VOLTAGE	24 V DC	UNIT MODEL	RA 102
POWER CAR OUTPUT		CAPACITY	217 AH	COOLING CAPACITY	24500 kcal / hr
MAXIMUM TRACTIVE EFFORT	—	BRAKE	ELECTRO PNEUMATIC CONTROL TREAD BRAKE	FRESH AIR VOLUME	1228 m³/hr
MAXIMUM SPEED	120 km/hr	TYPE OF BRAKE ON CAR	AIR & HAND	TOTAL IN PUT	21.6 kw, 40 A
DIESEL ENGINE	4 STROKE, HORIZONTAL	AIR COMPRESSOR	—	AIR CIRCULATING CAPACITY	4589 m³/hr
MAKER AND TYPE	CUMMINS NTA 855-R1	EFF. CAPACITY @ MAX. PRESSURE AND MAX. SPEED	—	COMPRESSOR (HERMATIC RECIPOCATING TYPE)	22 A 380 V, 3 POLE
NUMBER OF ENGINE	1	MINIMUM CURVE RADIUS NEGOTIABLE	122 m		
CYLINDER × BORE × STROKE	6 × 139.7 mm × 152 mm	WHEEL DIAMETER			

NOTE * M = MAIN ENGINE
D = DONKEY ENGINE

R S R.	AIR CONDITIONED POWER DIESEL RAILCAR WITH DRIVING CAB 285 HP	SCALES: DIMENSIONS IN mm
USED FOR	REF. DWG. No.	
APD. NO. 2501 – 2512 (SPRINTER)		SANCD. SEM.
REMARKS		
DR. CH. CH.	DATE 4/7/97	DIAGRAM No. APD. 1

A3S

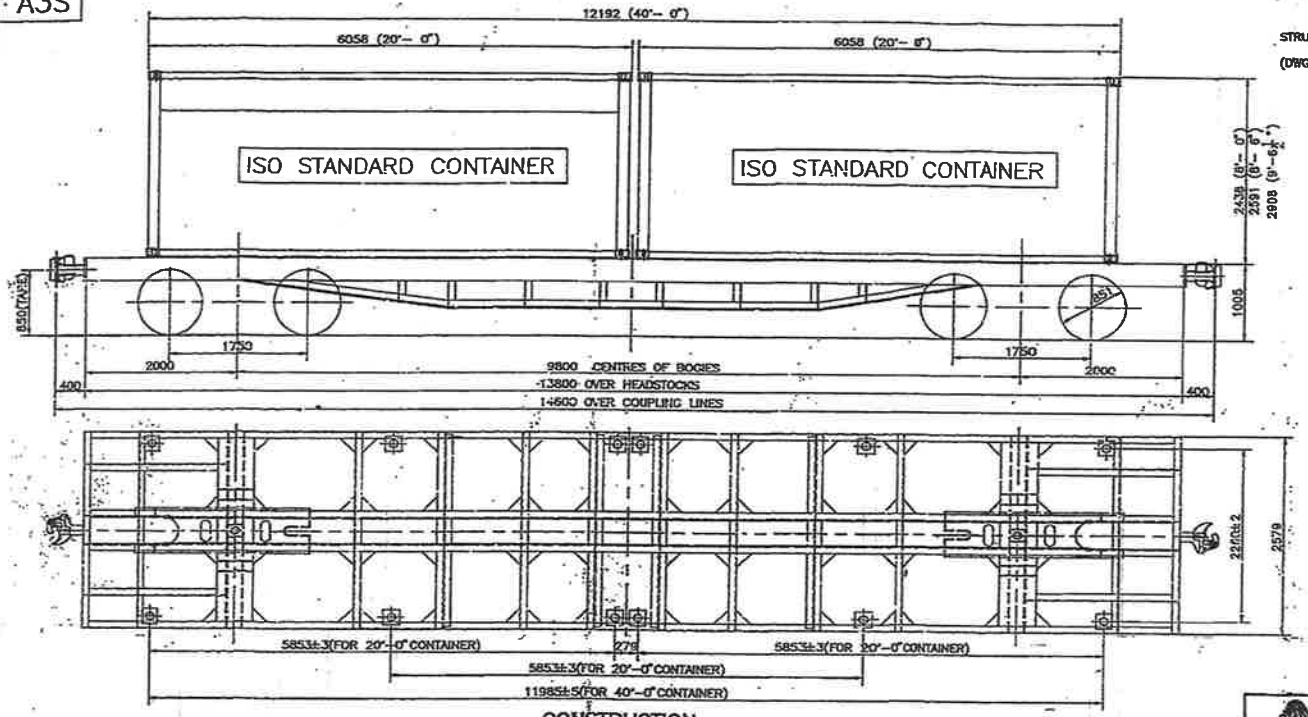

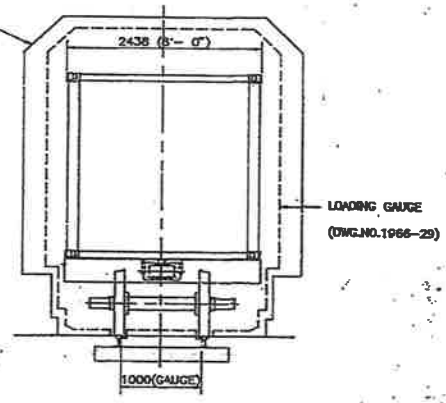

CONSTRUCTION

DIMENSIONS OVERALL
- LENGTH (OVER COUPLING LINES) ..... 14600 MM.
- WIDTH (OF UNDERFRAME) ..... 2579 MM.
- HEIGHT (FROM RAIL TO TOP OF UNDERFRAME) ..... 1005 MM.

AUTOMATIC COUPLER
- CONTROLLED SLACK BOTTOM OPERATED TYPE,11-INCH KNUCKLE WITH AAR.-10A CONTOUR, 5"x7" SWIVEL SHANK.

DRAFT GEAR
- RUBBER CUSHIONED, AAR. APPROVED TYPE, MF-491C-4 "KEYSTONE RAILWAY EQUIPMENT COMPANY OF U.S.A."

WHEELS & AXLE
- R.S.R. STANDARD TYPE 'Z' AP.
- JOURNAL SIZE 5 1/2"x10"
- ROLLER BEARING AAR. CLASS " D " PACKAGE UNIT WITH NARROW ADAPTER " TIMKEN COMPANY "
- WHEEL SEAT 190 MM., WHEEL DIA.851 MM. ON TREAD

BOGIES
- SWING MOTION TYPE " NATIONAL CASTING INC. "

BOLSTER SPRING
- 10 COILS, MEAN DIA. OF OUTER COIL SPRING ...117.47 MM.
- 10 COILS, MEAN DIA. OF INNER COIL SPRING ....65.87 MM.
- 4 COILS, MEAN DIA. OF FRICTION COIL SPRING ...93.66 MM.
- SPRING FLEXIBILITY PER BOGIE : 1.65 MM./TONNE

BRAKE SYSTEM : (AIR BRAKE WITH VACUUM THROUGH TRAIN PIPE)
- AIR BRAKE SYSTEM : DISTRIBUTOR VALVE TYPE KE2cSL/A(g).
- 1-BRAKE CYLINDER BG.12", AIR RESERVOIR 75 L. AND VIA CHANGE-OVER VALVE
- BRAKE REGULATOR : TYPE DRV. 2A2-600 " SAB WABCO AB "
- BRAKE LEVERAGE RATIO AT BOGIE 6.23 : 1 AND TOTAL BRAKE LEVERAGE RATIO 12.44 : 1

CAPACITY
- MAX.AXLE LOAD ON RAIL ..... 15.00 TONS.
- TARE WEIGHT ..... 15.60 TONS.
- PAY LOAD(MAX.) ..... 44.40 TONS.
- CUBIC CONTENTS ..... - TONS.

MAX. SPEED ..... 100 KM/HR.
YEAR PUT IN SERVICE ..... BE. 2539
MAKER : HYUNDAI PRECISION & IND. CO., LTD.

RSR.	BOGIE CONTAINER FLAT WAGON	SCALES: 1:50 DIMENSIONS IN MM.
USED FOR	REF. DWG. NO.	APP.
BCF.NO. 48001-48099		SANCD.
REMARKS:		DATE 6 MAY 99
DR.	CH.	CH.

DIAGRAM NO. BCF-14

A3

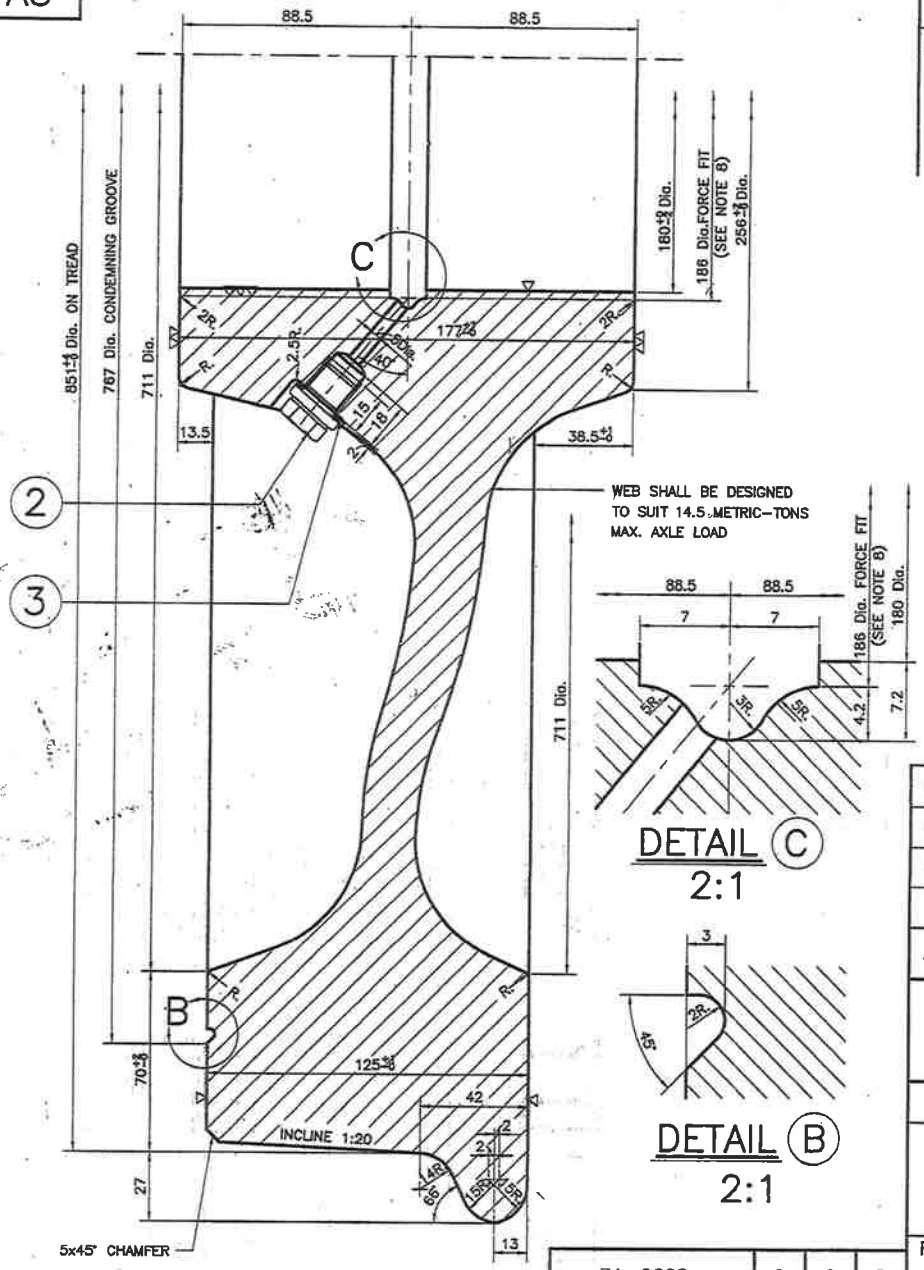

DETAIL A
1:2

DETAIL C
2:1

DETAIL B
2:1

DATE	SUMMARY OF CHANGES	DRAWING CANCELED	DR	CH	APP
30/03/17	1. WHEEL DIAMETER TOLERANCE IS DEFINED. 2. WHEEL DIAMETER SHALL BE PAINTED AND SHOWN ON ITS WEB.	P1-2606	สุริยาฯ	ทนงฯ	วิทูรย์ฯ
09/08/17	1. MATERIAL OF WHEEL (MARK ①) IS CHANGED TO AAR M-107/M-208 CLASS B. 2. TESTING AND STAMPING ARE CHANGED TO AAR M-101.	P1-2606/1			

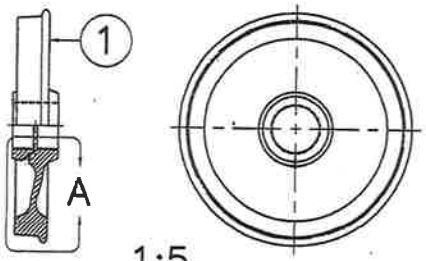

1:5

NOTE:-

1. WHEELS SHALL BE FORGED TYPE MACHINE FINISHED WHICH ARE MANUFACTURED FROM HIGH QUALITY STEEL ACCORDING TO AAR M-107/M-208 CLASS B OF THE LATEST REVISION INCLUDING TESTING AND STAMPING.
2. EACH WHEEL SHALL BE MANUFACTURED FROM A MANUFACTURER WHICH IS IN THE LIST OF AAR-APPROVED MANUFACTURERS AS STATE IN AAR M-107/M-208.
3. MACHINE TOLERANCES WHICH ARE NOT DESCRIBED SHALL BE GIVEN TO SUIT MANUFACTURING PRACTICE.
4. INCH EQUIVALENT IS ACCEPTABLE.
5. ALL WHEELS SHALL ALSO UNDERGO AN ULTRASONIC TEST AND A MAGNETIC PARTICLE TEST TO VERIFY THE ABSENCE OF IMPERFECTIONS.
6. EACH WHEEL SHALL BE COATED FOR PROTECTION AGAINST CORROSION AND AGAINST MECHANICAL AGGRESSION IN ACCORDANCE WITH EN 13262, AND SHALL BE PAINTED ITS DIAMETER ON WEB.
7. THE BORE OF 186 mm SHALL BE MACHINED BY SRT. LATER TO SUIT 180 mm AXLE SEAT DIAMETER.
8. WHEELS SHALL BE DESIGNED AND MANUFACTURED TO PROPERLY ASSEMBLE ON THE AXLE WHICH IS MANUFACTURED ACCORDING TO SRT. DWG. NO. P1-2607/1
9. EACH WHEEL INCLUDING OIL INJECTION PLUG AND GASKET ASSEMBLY SHALL BE TESTED AND MARKED FOR RESIDUAL IMBALANCE WHICH IS NOT MORE THAN 75 g.m.

ITEM	NAME OF PARTS	QTY.	MATERIALS	TENSILE STRENGTH&ELONGATION	REMARKS
③	GASKET	1	COPPER PLATE	26 kg/mm² & Min.35 %	OR APPROVED EQUAL
②	OIL INJECTION PLUG	1	STEEL	41-50 kg/mm² & Min.20 %	13.157Dia19T.P.I.(B.S.P.)OR (R1/4"DIN910) OR APPROVED EQUAL
①	SOLID (MONOBLOCK) WHEEL	1	AAR CLASS B		SEE NOTE

= HAND FINISHED | ▽ = ROUGH MACHINED | ▽▽ = FINISHED MACHINED | ▽▽▽ = FINE FINISHED MACHINED | ○ = GROUND SURFACE

SRT. SOLID (MONOBLOCK) WHEEL

SCALES: 1:2,1:5,2:1

DIMENSIONS IN mm

USED FOR	REF. DWG. NO.
CW750 BOGIE	

REMARKS:

จัดทำขึ้นเพื่อใช้ประกอบการจัดหาล้อรีดทึบ SOLID (MONOBLOCK) WHEEL สำหรับรถโดยสารรุ่น 115 คัน

APP. วิทูรย์ บุญเพื่องฟู EMT.

SANCD. ชูเกียรติ สีลาขจรจิต SEM.

DR. สาธิตฯ CH. 1 CH. สุระศักดิ์ฯ

DATE 09/08/60

P1-2606/2

ASSEMBLY DRAWING NO.	ITEM	PER GROUP	PER CAR
P1-2608	2	2	8
		QTY.	

A2

DATE	SUMMARY OF CHANGES	DRAWING CANCELED	DR	CH	APP
09/08/17	1. MATERIAL OF AXLE IS CHANGED TO AAR M-101 GRADE F. 2. TESTING AND STAMPING ARE CHANGED TO AAR M-101.	P1-2607			

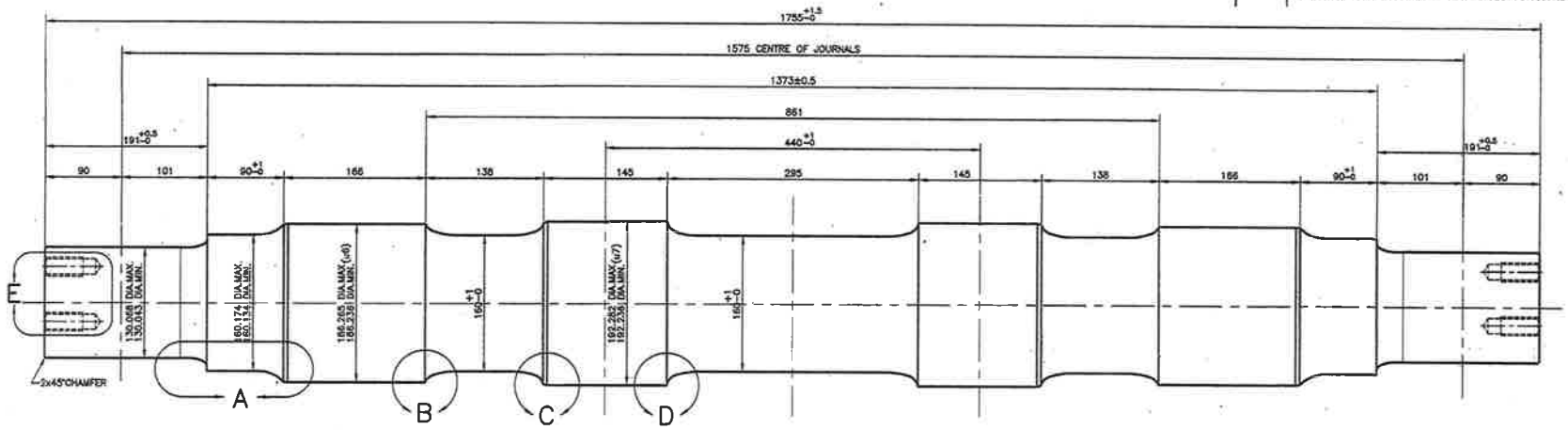

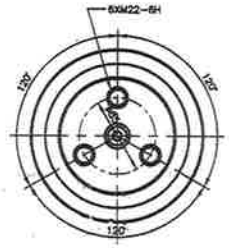

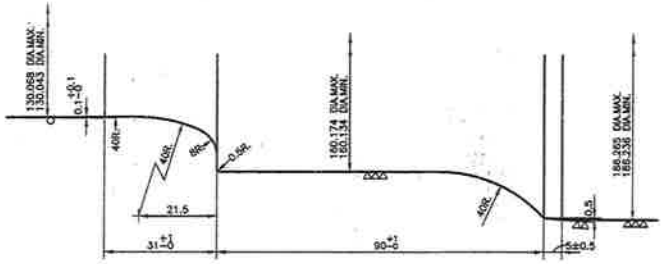

DETAIL (A)
1:1

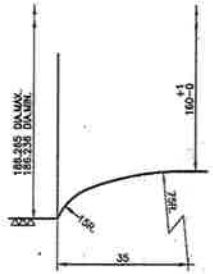

DETAIL (B)
1:1

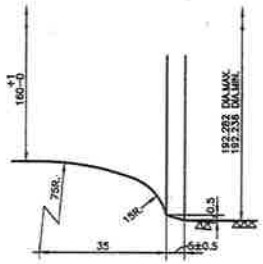

DETAIL (C)
1:1

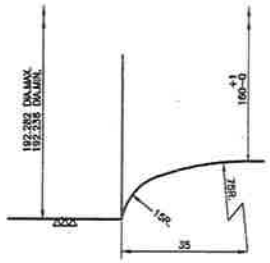

DETAIL (D)
1:1

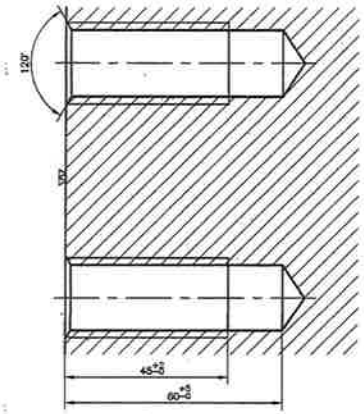

DETAIL (E)
1:1

NOTE:-

1. MACHINE TOLERANCES, WHERE ARE NOT DESCRIBED, SHALL BE GIVEN TO SUIT MANUFACTURING PRACTICE.
2. INCH EQUIVALENT IS ACCEPTABLE.
3. EACH AXLE SHALL BE MANUFACTURED FROM A MANUFACTURER WHICH IS IN THE LIST OF AAR-APPROVED MANUFACTURES AS STATED IN AAR M-101.
4. AXLES SHALL BE MACHINE FINISHED WHICH ARE MANUFACTURED FROM HIGH QUALITY STEEL ACCORDING TO AAR M-101 GRADE F OF THE LATEST VERSION INCLUDING TESTING AND STAMPING.
5. EACH AXLE SHALL BE COATED FOR PROTECTION AGAINST CORROSION AND AGAINST MECHANICAL AGGRESSION IN ACCORDANCE WITH EN 13261 CLASS 3.
6. AXLE SHALL BE DESIGNED AND MANUFACTURED TO PROPERLY ASSEMBLE WITH WHEELS WHICH ARE MANUFACTURED ACCORDING TO SRT. DWG. NO. P1-2606/2.

ITEM	NAME OF PARTS	QTY.	MATERIALS	TENSILE STRENGTH&ELONGATION	REMARKS
	AXLE	1	AAR CLASS B		SEE NOTE

∩ = HAND FINISHED | ▽ = ROUGH MACHINED | ▽▽ = FINISHED MACHINED | ▽▽▽ = FINE FINISHED MACHINED | Ω = GROUND SURFACE

SRT.

AXLE

SCALES: 1:1,1:4

DIMENSIONS IN MM.

USED FOR	REF. DWG. NO.
BOGIE CW750	

APP. วิทูรย์ บุญเรืองรุ่ง EMT.

SANCD. ชูเกียรติ ธีรภาพจริต SEM.

REMARKS:
จัดทำขึ้นเพื่อใช้ประกอบการจัดหาเพลา AXLE สำหรับประเมินราคา 115 คัน

P1-2608	1	2	4
ASSEMBLY DRAWING NO.	ITEM	PER GROUP QTY.	PER CAR

DR. ศุภชัย CH. ทนต์ CH. สุรเกียรติ

DATE 09/08/60

P1-2607/1

A2

DATE	SUMMARY OF CHANGES	DRAWING CANCELED	DR	CH	APP
25/07/61	1. WHEEL AND AXLE DRAWINGS ARE UPDATED.	P1-2608			

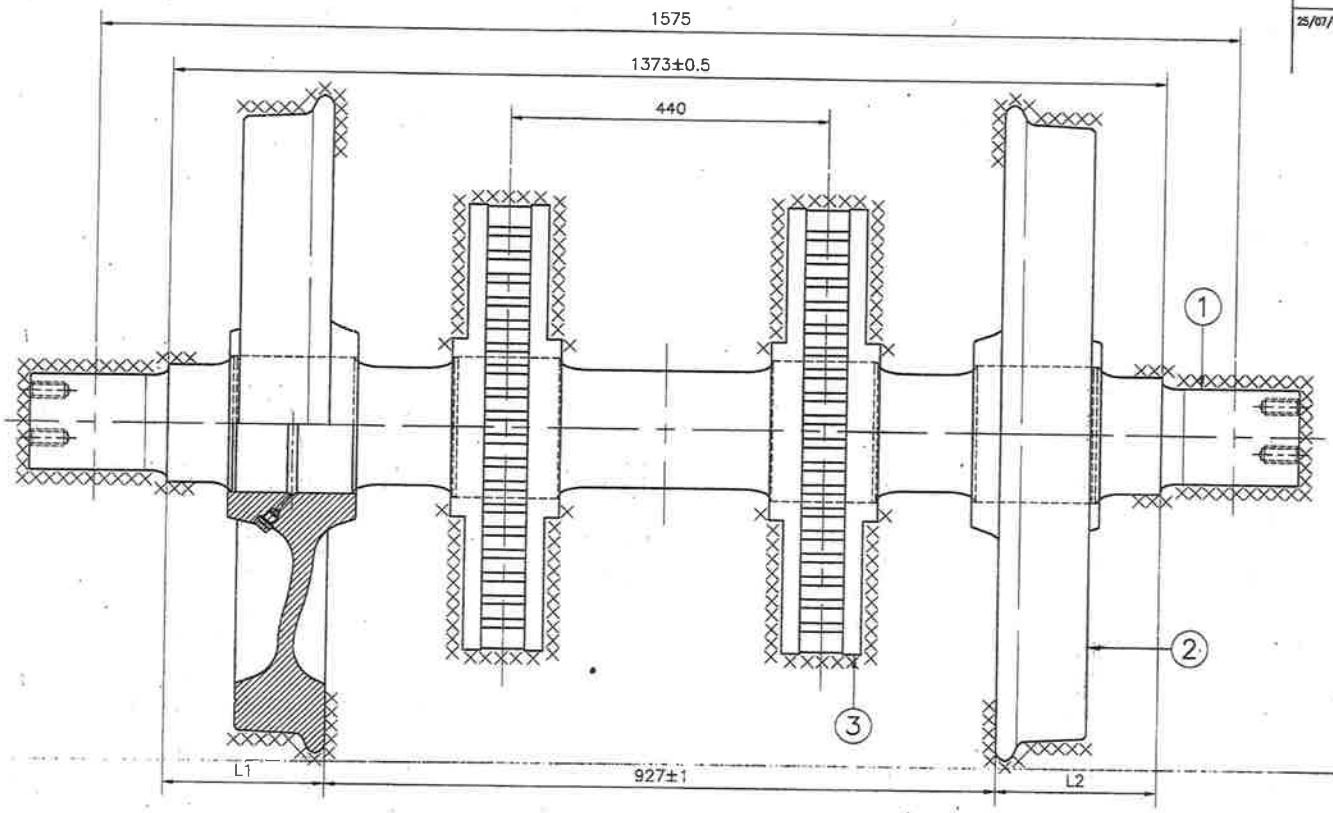

NOTE

1. THE DIFFERENTIAL DISTANCE OF ANY THREE POINTS ON THE SAME BACK FACE SHALL BE LESS THAN 1 mm.
2. |L1−L2| SHALL BE NOT MORE THAN 1 mm.
3. THE RADIAL RUN-OUT OF THE TWO ROLLING CIRCLES RELATIVE TO THE AXIAL CENTER ≤0.5 mm.
4. THE DIAMETER DIFFERENTIAL OF TWO WHEELS ROLLING CIRCLE OF THE WHEELSET ≤0.5 mm.
5. THE END SURFACE RUN-OUT OF TWO WHEEL RIM INSIDE SURFACE RELATIVE TO THE AXIAL CENTER ≤0.8 mm.
6. ASSEMBLING OF AXLE AND WHEELS SHALL BE DONE ACCORDING TO EN13260-2009 BY SHRINK-FITTING OR PRESS-FITTING (TEMPERATURE IS NOT EXCEED 250°C.) FOR SHRINK-FITTING, THE FINAL PRESSURE OF THE WHEEL AXLE ASSEMBLING IS 635-1075 kN. SHRINK-FITTING OR PRESS-FITTING SHALL BE DONE ACCORDING TO EN13260-2009 PRESSURE TEST, TEST PRESSURE 744 kN.
7. DON'T PAINT ON THE XXXXXXXX AREA AND ON BRAKE DISCS. THE REST AREAS SHALL BE PAINTED AS SAME AS THE BOGIE COLOR.
8. AFTER WHEELSET ASSEMBLY, DYNAMIC BALANCE TEST SHALL BE PROCEEDED. THE TEST SPEED SHALL BE NOT LESS THAN 235 RPM. DO REMOVE THE IMBALANCE IN THE CASE OF IMBALANCE VALUE IS EXCEED 75 gm.
9. THE OTHERS SHALL BE COMPLIED WITH EN13260-2009.

ITEM	NAME OF PARTS	QTY.	MATERIALS	TENSILE STRENGTH&ELONGATION	REMARKS
3	BRAKE DISC	2			DWG.No.881377/1 ORDERING CODE: I88961/192 0
2	SOLID (MONOBLOCK) WHEEL	2			DWG.No.P1-2606/2
1	AXLE	1			DWG.No.P1-2607/1

HAND FINISHED = ▽ ROUGH MACHINED = ▽▽ FINISHED MACHINED = ▽▽▽ FINE FINISHED MACHINED = ▽ GROUND SURFACE

SRT. SOLID (MONOBLOCK) WHEELS & AXLE

SCALES: 1:5

DIMENSIONS IN mm

USED FOR	REF. DWG. No.	
CW750 BOGIE		APP. วิทูรย์ บุญเรืองรุ่ง EMT.
REMARKS: ผลิตขึ้นเพื่อใช้ประกอบการผลิตทดลองพร้อมเพลา SOLID (MONOBLOCK) WHEELS AND AXLE สำหรับรถเบี่ยงเบรงพาณิชย์ จำนวน 115 คัน		SANCD. ชูเกียรติ ลีลาชลจรัส SEM.
DR. สุรียา CH. ทนงฯ CH. สุวะสักดิ์	DATE 30/03/60	P1-2608/1

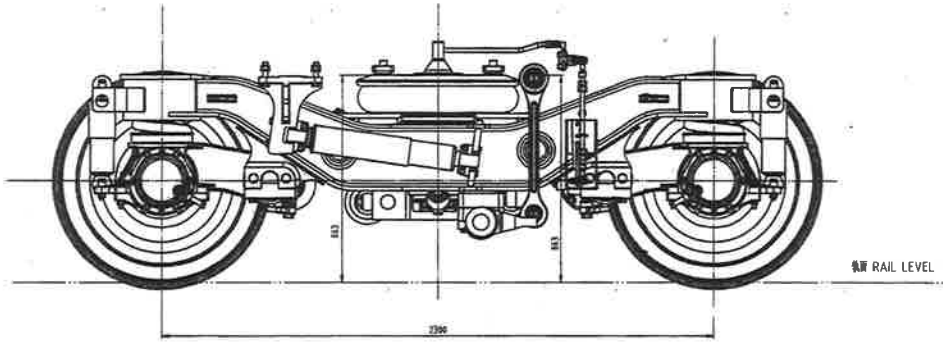

轨面 RAIL LEVEL

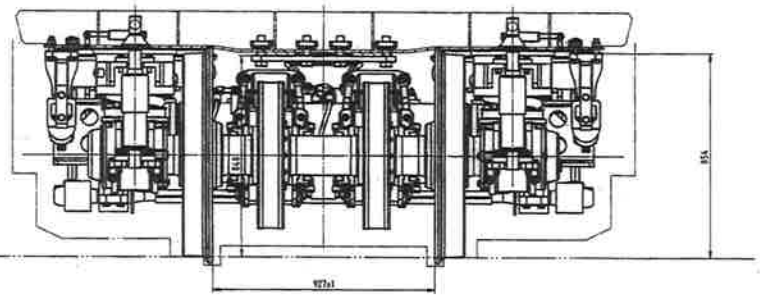

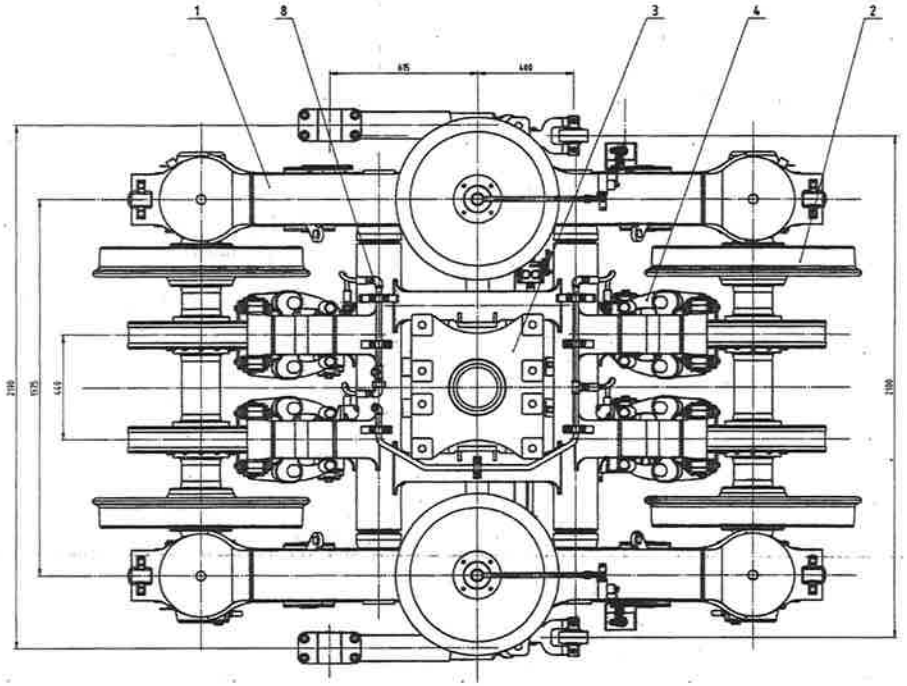

车端
END OF CAR

主要技术参数 TECHNICAL PARAMETERS				
最高运行速度 MAXIMUM OPERATING SPEED	120km/h	轨距 TRACK GAUGE	1000mm	
最高试验速度 MAXIMUM TESTING SPEED	132km/h	轴承型号 BEARING TYPE	130X230X160	
轴 距 WHEELBASE	2300mm	基础制动 MECHANICAL BRAKE	盘型制动 DISC BRAKE	
允许最大轴重 MAX. AXLE LOAD	14.5t	通过最小曲线半径 MIN.RADIUS OF CURVE	干线MAIN LINE	180m
轮 径 WHEEL DIAMETER	851/767mm		厂内道岔更线 DIVERSION LINE	130m

技术要求

1 序号4,用于CCK310,CCK314,CCK313二位转向架基础制动装置安装及CCK311,CCK312一位转向架基础制动装置安装。
2 序号5,用于CCK310,CCK313一位转向架基础制动装置安装及CCK312二位转向架基础制动装置安装。
3 序号6,用于CCK311二位转向架基础制动装置安装。
4 序号7,用于CCK314一位转向架基础制动装置安装。
5 序号8,用于CCK310,CCK314,CCK313二位转向架及CCK311,CCK312一位转向架基础制动管安装。
6 序号9,用于CCK310,CCK314,CCK313一位转向架基础制动装置安装及CCK311,CCK312二位转向架基础制动装置安装。

NOTE

1 NO.4 IS FOR CCK310,CCK314,CCK313 TWO END BOGIE INSTALLATION AND CCK311,CCK312 ONE END BOGIE INSTALLATION.
2 NO.5 IS FOR CCK310,CCK313 ONE END BOGIE INSTALLATION AND CCK312 TWO END BOGIE INSTALLATION.
3 NO.6 IS FOR CCK311 TWO END BOGIE INSTALLATION.
4 NO.7 IS FOR CCK314 ONE END BOGIE INSTALLATION.
5 NO.8 IS FOR CCK310,CCK314,CCK313 TWO END BOGIE INSTALLATION AND CCK311,CCK312 ONE END BOGIE INSTALLATION.
5 NO.9 IS FOR CCK310,CCK314,CCK313 ONE END BOGIE INSTALLATION AND CCK311,CCK312 TWO END BOGIE INSTALLATION.

序号 REF	部件代号 PART CODE	图号 DOC CODE	名称 DESCRIPTION	数量 QTY	材料 MATERIAL	单重 WEIGHT	备注 REMARKS
9		CCKZ76-60A-000	基础制动装置(带手制动) BASAL BRAKING FIXTURE(HAND BRAKE)	1		18.72	图样未示 NO DRAWING
8		CCKZ76-60-000	基础制动装置(不带手制动) BASAL BRAKING FIXTURE(NO HAND BRAKE)	1		18.72	
7		CCKZ76-59C-000	基础制动装置(带手制动) BASAL BRAKING FIXTURE(WITH HAND BRAKE)	1		800	图样未示 NO DRAWING
6		CCKZ76-59B-000	基础制动装置(带手制动) BASAL BRAKING FIXTURE(WITH HAND BRAKE)	1		800	图样未示 NO DRAWING
5		CCKZ76-59A-000	基础制动装置(带手制动) BASAL BRAKING FIXTURE(WITH HAND BRAKE)	1		800	图样未示 NO DRAWING
4		CCKZ76-50-000	基础制动装置安装 BRAKE ACTUATING DEVICE INSTALLATION	1		760	
3		CCKZ76-30-000	中央悬挂装置 SECONDARY SUSPENSION SYSTEM	1		6312	
2		CCKZ76-20-000	轴箱定位装置 AXLE BOX GUIDANCE	1		2954	
1		CCKZ76-01-000	转向架组成 BOGIE FRAME ASSEMBLY	1		1207	

版次 REV. NO.	处数 NO.	更改文件编号 MODIFIED DOC NO	日期 DATE	签名 SIGN	版次 REV. NO.	处数 NO.	更改文件编号 MODIFIED DOC NO	日期 DATE	签名 SIGN

长春轨道客车股份有限公司 CHANCHUN RAILWAY VEHICLES CO.,LTD.

设计 DESIGN		版次 REV	重量 WEIGHT	比例 SCALE	图号 DWG	CW750转向架 BOGIE
工艺		A	7990	1:10	A3	
标准化		页次 PAGE	张数共数 CLASS			CCKZ76-00-000
审核		1 / 1	A			

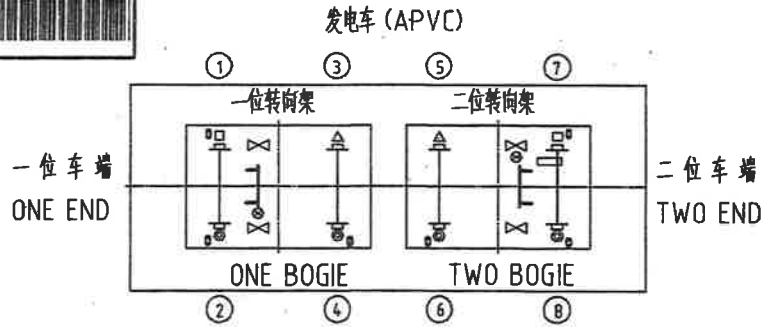

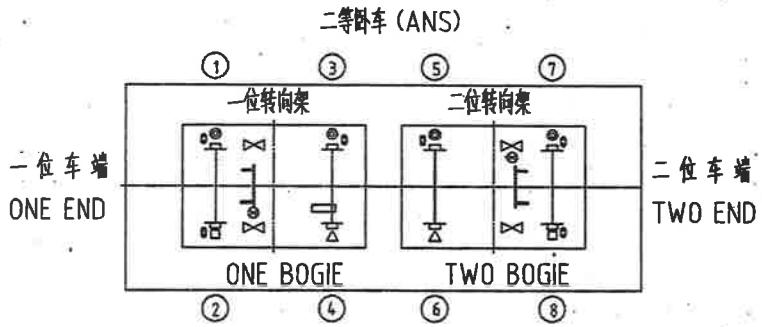

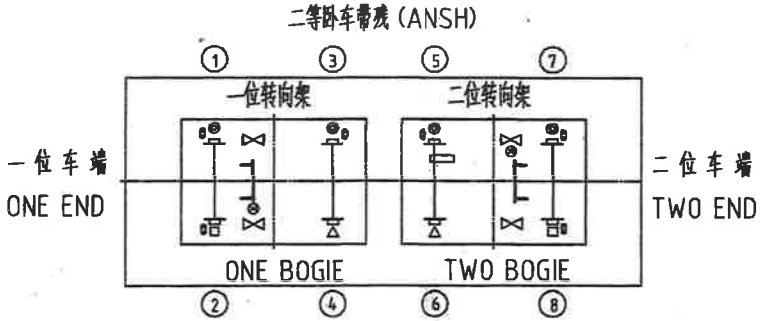

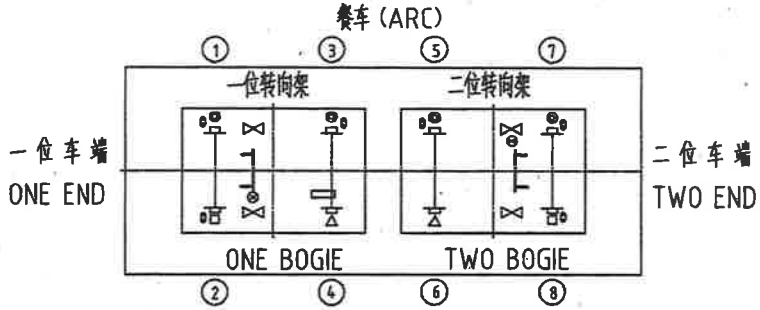

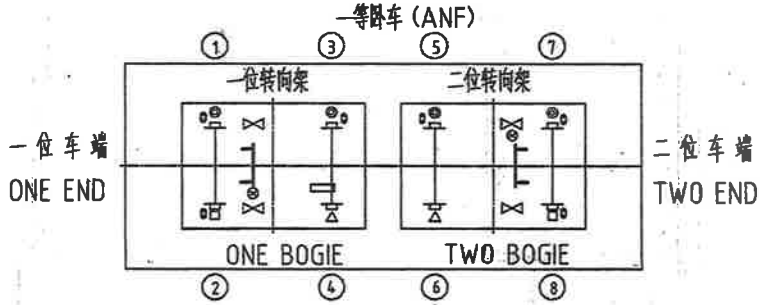

序号 NO.	符号 SIGN	设备 EQUIPMENT	数量 NUMBER 发电车 APVC	二等车 ANS	二等车残 ANSH	餐车车 ARC	一等卧车 ANF
1	⋈	高度阀 LEVELLING VALVE	4	4	4	4	4
2	●	差压阀 DIFFERENTIAL VALVE	2	2	2	2	2
3	△	接地轴端 EARTH AXLE END	2	2	2	2	2
4	●	防滑轴端 PREVENT SLIP AXLE END	4	4	4	4	4
5	□	普通轴端 GENERAL AXLE END	2	2	2	2	2
6	▫	接地板 EARTH PLATE	6	6	6	6	6
7	⊓	扭杆 TORSION BAR ASSEMBLY	2	2	2	2	2
8	▭	手制动单元 HAND BRAKE	1	1	1	1	1

版本 REV/标记 MARK	处数 NO.	更改文件编号 MODIFIED DOC NO	日期 DATE	签名 SIGN	版本 REV/标记 MARK	处数 NO.	更改文件编号 MODIFIED DOC NO	日期 DATE	签名 SIGN

CRR 中国北车 长春轨道客车股份有限公司 CHANGCHUN RAILWAY VEHICLES CO., LTD.

设计 DESIGN	2016/5/4	工艺 W.E.		版本 REV	重量 WEIGHT	比例 SCALE	图幅 WING
审核 REVIEW	2016.5.5	工艺 RE.TECH.		A	7304	1:1	A3
区域 AREA RE.		会签 S.REVIEW				页次 PAGE	质量分级 CLASS
主管 DIRECTOR	2016.5.9	审定 APP				1 / 1	A
工艺 TECH.		批准 SIGN	2016.5				
总工程师 A.E.		绘图软件 DRAWING	AutoCAD Mechanical 2013				

转向架配置图

BOGIE STATION DRAWING

CCKZ76-00-000PZ

70

ECZ37-00-00-000

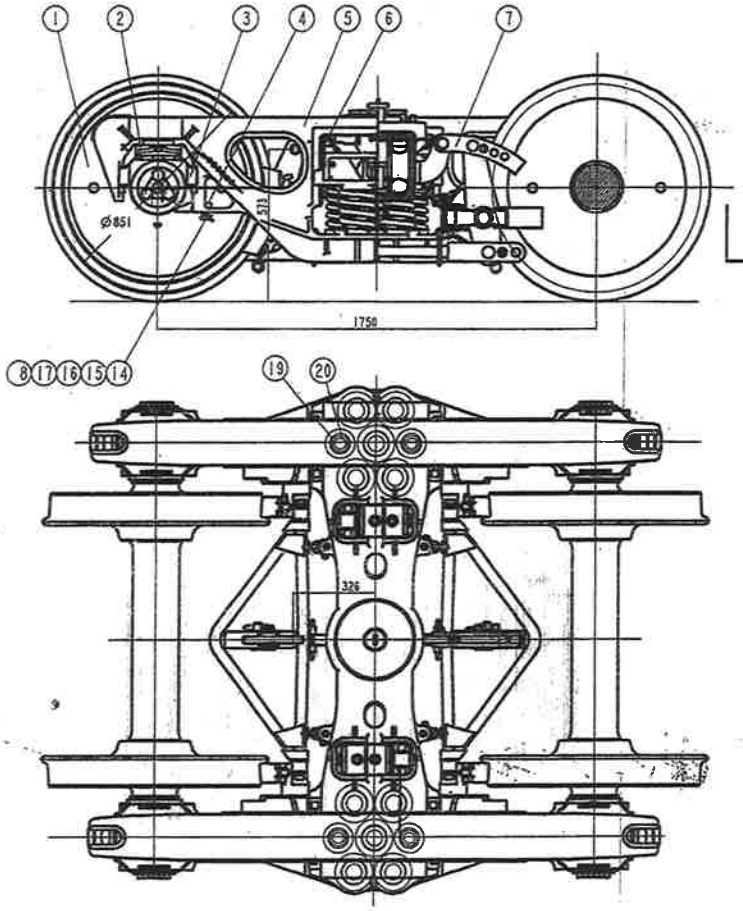

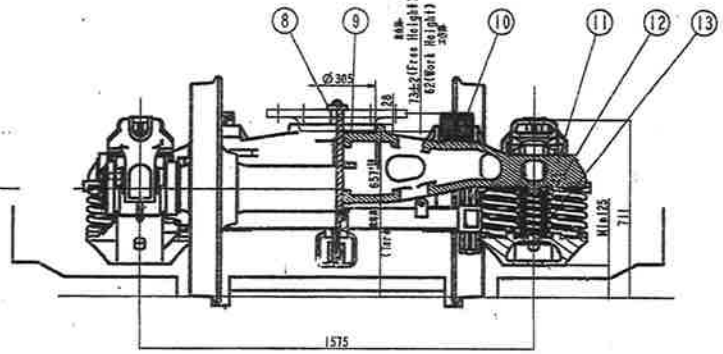

主要参数

1	轨距(mm)	1000
2	最大运行速度(km/h)	100
3	轴重(t)	20

MAIN PARAMETERS

1	Gauge(mm)	1000
2	Max.running speed(Km/h)	100
3	Axle load(max) (t)	20

技术要求

1 按照ECZ37JT(EQC-M02型转向架技术条件)制造与验收。

Technical Requirements

1 Manufacture and accept according to the technical specification of ECZ37JT EQC-M02 type bogie.

序号 ITEM	代号 PARTS NO.	名称 NAME OF PARTS	数量 QTY	材料 MATERIALS	单重 UNIT WEIGHT	总重 TOTAL WEIGHT	备注 REMARKS
20	ECZ37-00-00-004	Inner Spring For Damping	4	60Si2CrVAT	1.96	7.84	
19	ECZ37-00-00-005	Outer Spring For Damping	4	60Si2CrVAT	4.9	19.6	
18	GB/T91	6.3X36 Pin6.3X36	4	Q215A	0.004	0.016	
17	GB/T93	Washer16	4	65Mn	0.008	0.032	
16	GB/T6170	Nut M16	4	8A	0.034	0.136	
15	QCZ133-00-05	Bolt M16X80	4	8.8A	0.216	0.864	
14	QCZ103-00-05	Adjusting pad	4	Q235B	0.16	0.64	
13	ECZ37-00-00-008	Inner Spring	10	60Si2CrVAT	3.86	38.6	
12	ECZ37-00-00-007	Outer Spring	10	60Si2CrVAT	7.51	75.1	
11	ECZ37-40-00-000	Bolster Assembly	1	-	493	493	
10	ECZ37-00-00-000	Side Bearing Assembly	2		15.72	31.44	
9	ECZ37-00-00-004	Center Plate Pad	1	Nn13	4.6	4.6	
8	ECZ27-01-00-000	Center Pin Assembly	1		7.9	7.9	
7	ECZ37-50-00-000	Brake Device	1		165	165	
6	ECZ37-31-00-000	Combined Wedge	4		8.5	34	
5	ECZ37-20-00-000	Side Frame Assembly	2		360	720	
4	ECZ37-00-00-002	Guard Key	4	B6M AAR M201 Grade B	1.3	5.2	
3	ECZ37-00-00-001	Adapter	4	B6M AAR M201 Grade B	20	80	
2	ECZ37-30-00-000	Rubber Cushion	4		11.6	46.4	
1	ECZ37-10-00-000	Wheel Set With Roller Bearing	2		1058	2116	

设 计	DESIGNER		2013.12.20
校 对	CORRECTOR		2013.12.20
主管设计	CHARGE DESIGNER		2013.12.20
工 艺	TECHNOLOGY INSPECTOR		2013.12.20
工 艺	TECHNOLOGY INSPECTOR		
标准化	STANDARD INSPECTOR		2013.12.20
审 核	CHECKER		2013.12.20
批 准	APPROVER		2014.01.14

CRRC BEIJING ERQ VEHICLE CO.,LTD.

EQC-M02型转向架 EQC-M02 TYPE BOGIE

标记 SYMBOL	重量 WEIGHT	比例 SCALE
S A	3885	1:10

ECZ37-00-00-000

SRT.-B.C.F

CONTRACT No.15THHGTEBCZ/HAN

4 5 6

TAROL6-11-U-JP-CLASS-E

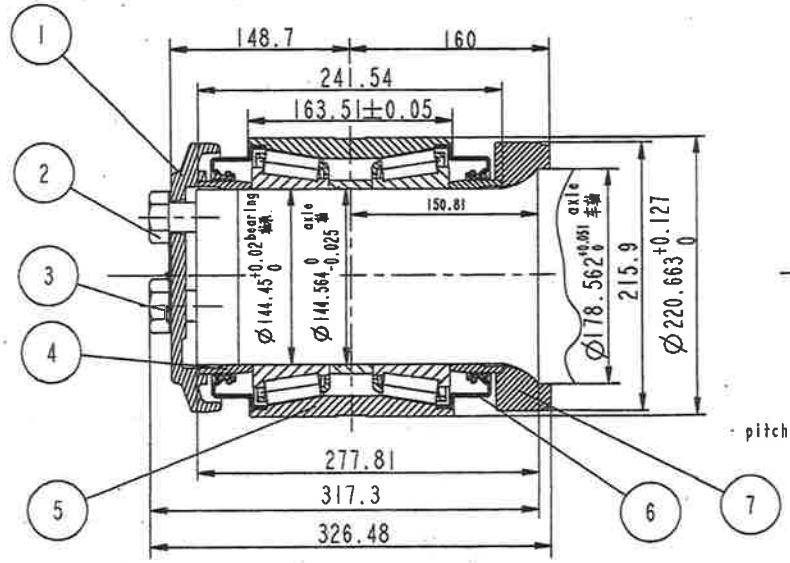

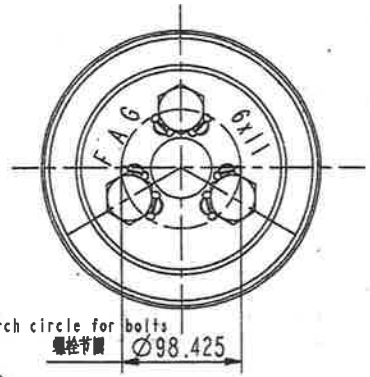

Technical Requirements

1 On axle:
tap:1-8 UNC-2B×2.0inch deep
core hole:*0.875inch×2.85inch deep
2 Greasing:
AAR approved grease. Quantity:454g±28g.
3 Bench lateral:0.584 to 0.737mm. Mounted lateral:0.0254 to 0.381mm.
4 Tightening torque:393±16N·m

序号 ITEM	代号 PARTS NO.	名称 NAME OF PARTS	数量 QTY.	材料 MATERIALS	单重 UNIT WEIGHT	总重 TOTAL WEIGHT	备注 REMARKS
7		后挡 Backing Ring	1				
6		油密封 Grease Seal	2				
5		圆锥滚子轴承 Tapered Roller Bearing	1				
4		密封磨耗圈 Seal Wear Ring	2				
3		锁紧盘 Locking Plate	1				
2		端盖螺栓 Cap Screw 1-8unc	3				
1		前盖 End Cap	1				

设计 DESIGNER	王金峰	2013.12.11	
校对 CORRECTOR	张振合	2013.12.11	
主管设计 CHARGE DESIGNER	张振合	2013.12.11	
工艺 TECHNOLOGY INSPECTOR	刘腾	2013.12.11	
工艺 TECHNOLOGY INSPECTOR			
标准化 STANDARD INSPECTOR	刘伟	2013.12.11	
审核 CHECKER	陈虎	2013.12.11	
批准 APPROVER			

CRRC BEIJING ERQI VEHICLE CO., LTD.

标记 SYMBOL	重量 WEIGHT	比例 SCALE
S A	34.9	1:4

共1张 第1张 TOTAL PAGE 1 No.1

SRT.-B.C.F

轴承装置
Roller Bearing Assembly

TAROL6-11-U-JP-CLASS-E

CONTRACT No.15TH01GTB3EZJ0006N

装配图代号 ASSEMBLY DRAWING NO.	序号 ITEM	每组 PER GROUP 数量 QTY.	每台 PER WAGON
ECZ37-10-00-000	1	2	8

ECZ37-10-01-002

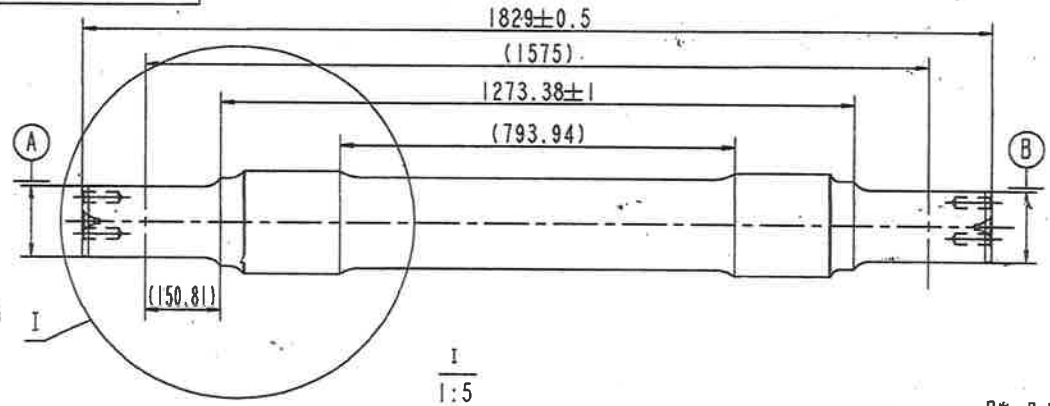

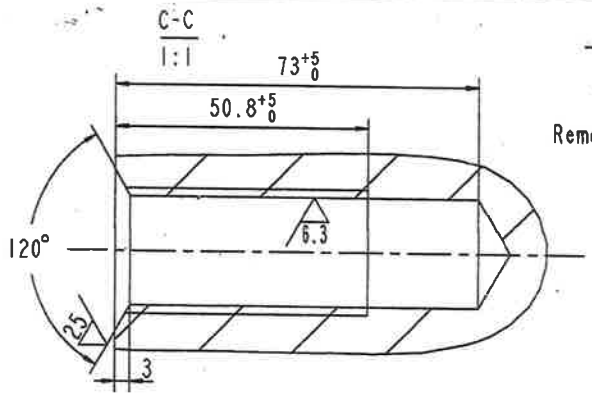

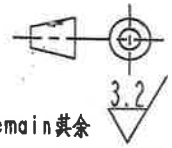

Remain其余

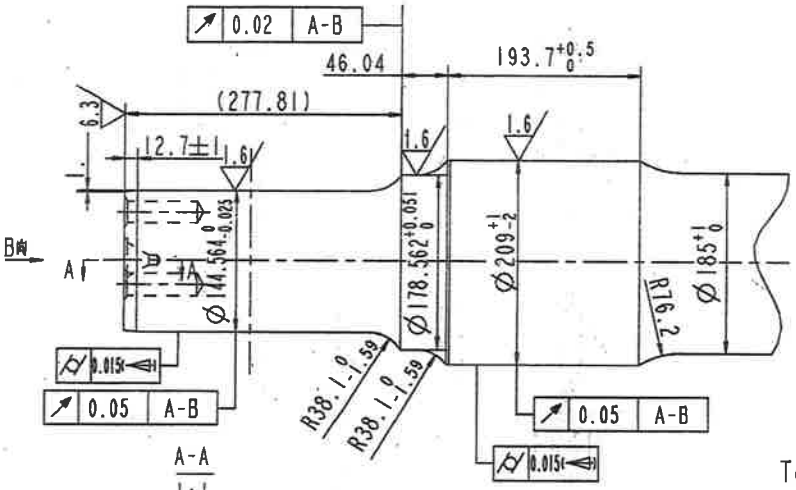

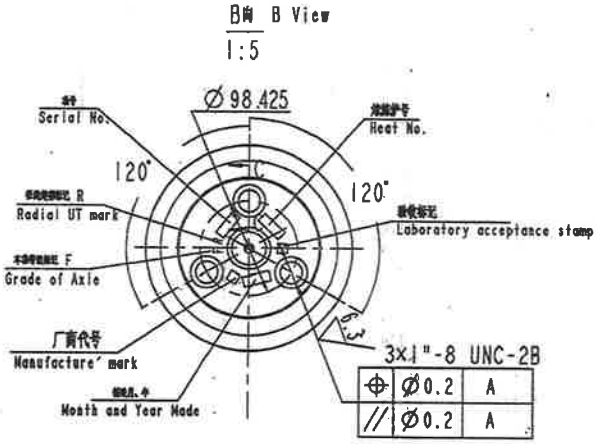

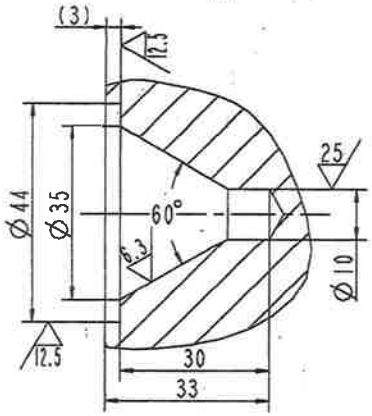

Technical Requirements

1 Except the end face of the axle, it is not allowed to stamp mark on the rest parts. The end with mark is named L end, while the other end is R end. All marks will legibly with characters not less than 7mm high locating adjacent to the periphery of the centering hole.

2 The undefined tolerances accord to the grade m requirements in the GB/T1804.

3 Except the fit surface, the axle surface should be coated with priming paint HEMP 07003 and finishing coat HMP 7007with the gray color of RAL 7012 respectively, the total dry film thickness of which should not be less than 120μm. The anticorrosion requirements conform to EN13262 class 3.

ECZ37-10-01-000	2	1	4
装配图代号 ASSEMBLY DRAWING NO.	序号 ITEM	每组 PER GROUP	每台 PER WAGON 数量QTY.

设 计	DESIGNER	王金锋	2016.01.22
校 对	CORRECTOR	张凯令	2016.01.22
主管设计	CHARGE DESIGNER	张凯令	2016.01.22
工 艺	TECHNOLOGY INSPECTOR	冯涛	2016.01.22
工 艺	TECHNOLOGY INSPECTOR		
标准化	STANDARD INSPECTOR	冯涛	2016.01.22
审 核	CHECKER	陈光	2016.01.25
批 准	APPROVER		

AAR M101 Grade F

标记 SYMBOL		重量 WEIGHT	比例 SCALE
S	A	363.5	1:10

共 1 张 第 1 张
TOTAL PAGE 1 NO. 1

SRT.-B.C.F

CRRC BEIJING ERQI VEHICLE CO.,LTD.

Axle

ECZ37-10-01-002

CONTRACT No.15TH01GTB3EZJ0006N

QSJZ24-20-10-000

THIS DRAWING/MODEL CONTAINS PROPRIETARY INFORMATION, THE PROPERTY OF CSR Qishuyan Co., Ltd.
IT SHALL NOT BE REPRODUCED IN ANY MANNER NOR DISCLOSED TO THIRD PARTIES WITHOUT WRITTEN
PERMISSION OF CSR Qishuyan Co., Ltd. CSR Qishuyan Co., Ltd Reserve All Rights of Drawing.

REV	ITEM	SIGN	DATE

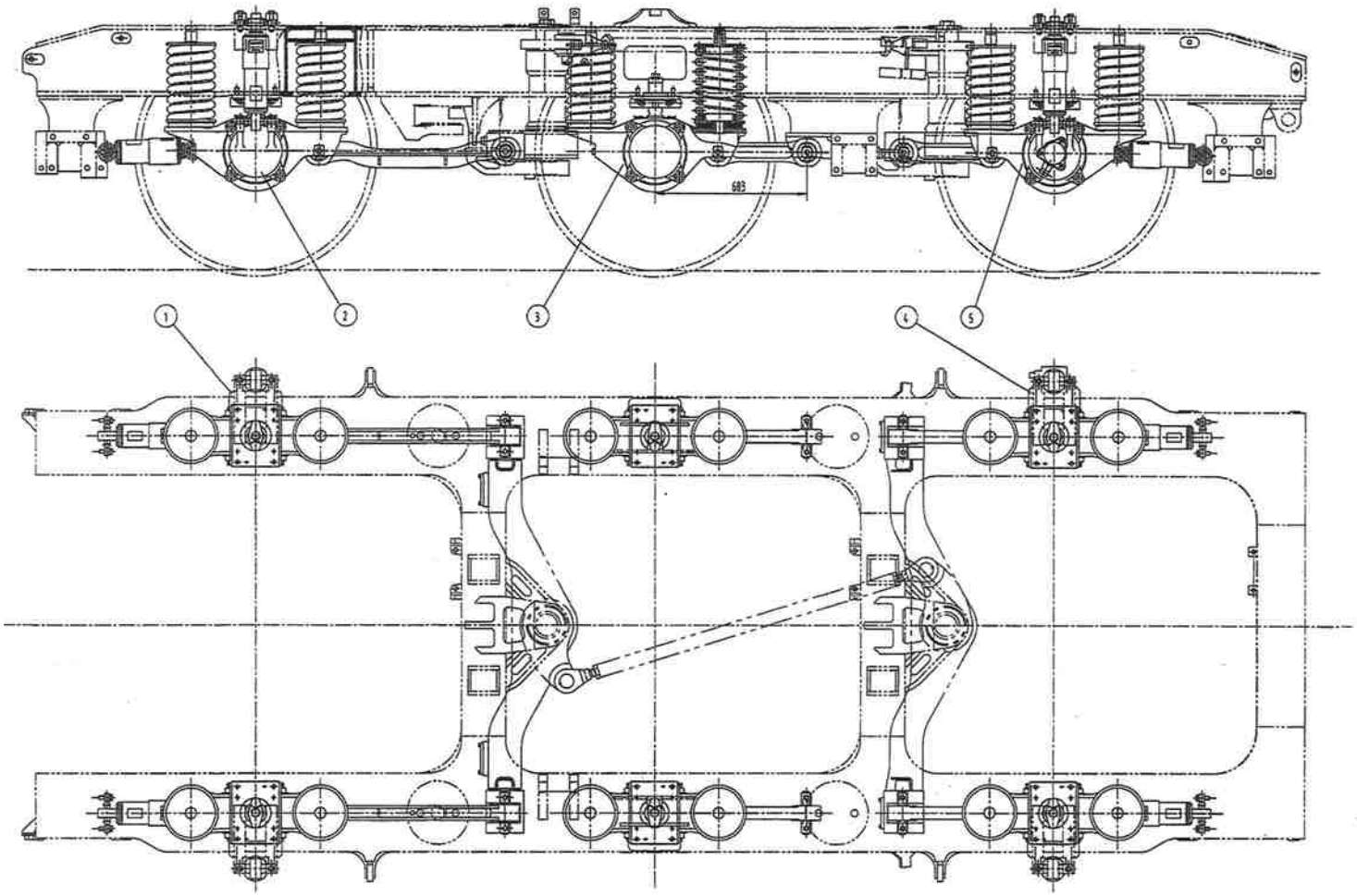

Axle box layout sketch map

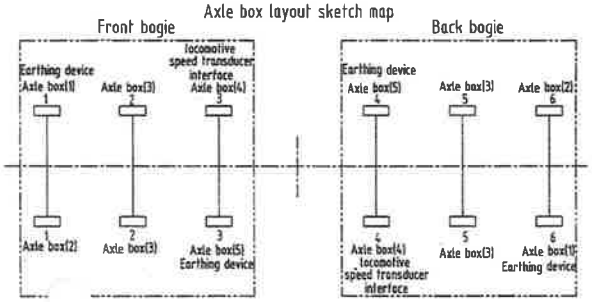

S/N	CODE	NAME	QTY	MATERIAL	WEIGHT UNIT	WEIGHT TOTAL	REMARK
5	QSJZ24-20-15-000	Axle box(5)	1			303	
4	QSJZ24-20-14-000	Axle box(4)	1			305.7	
3	QSJZ24-20-13-000	Axle box(3)	2		269.7	539.4	
2	QSJZ24-20-12-000	Axle box(2)	1			308.6	
1	QSJZ24-20-11-000	Axle box(1)	1			309.6	

CSR Qishuyan Co., Ltd.

Bogie

Axle box assembly

REV	AREA	BLOCK	ITEM	SIGN	DATE
DRW			STAN		
CHK			CHF INS		
SUPERVISOR			AUD		
PROG			APP		

STAGE		WEIGHT	SCALE
S		1766	1:10
SHT		OF	

QSJZ24-20-10-000

QSJZ24-20-20-000

THIS DRAWING,WHICH CONTAINS PROPRIETARY INFORMATIONS,IS THE PROPERTY OF CSR Qishuyan Co., Ltd.
IT SHALL NOT BE REPRODUCED IN ANY MANNER NOR DISCLOSED TO THIRD PARTIES WITHOUT WRITTEN
PERMISSION OF CSR Qishuyan Co., Ltd. CSR Qishuyan Co., Ltd Reserve All Rights of Drawing

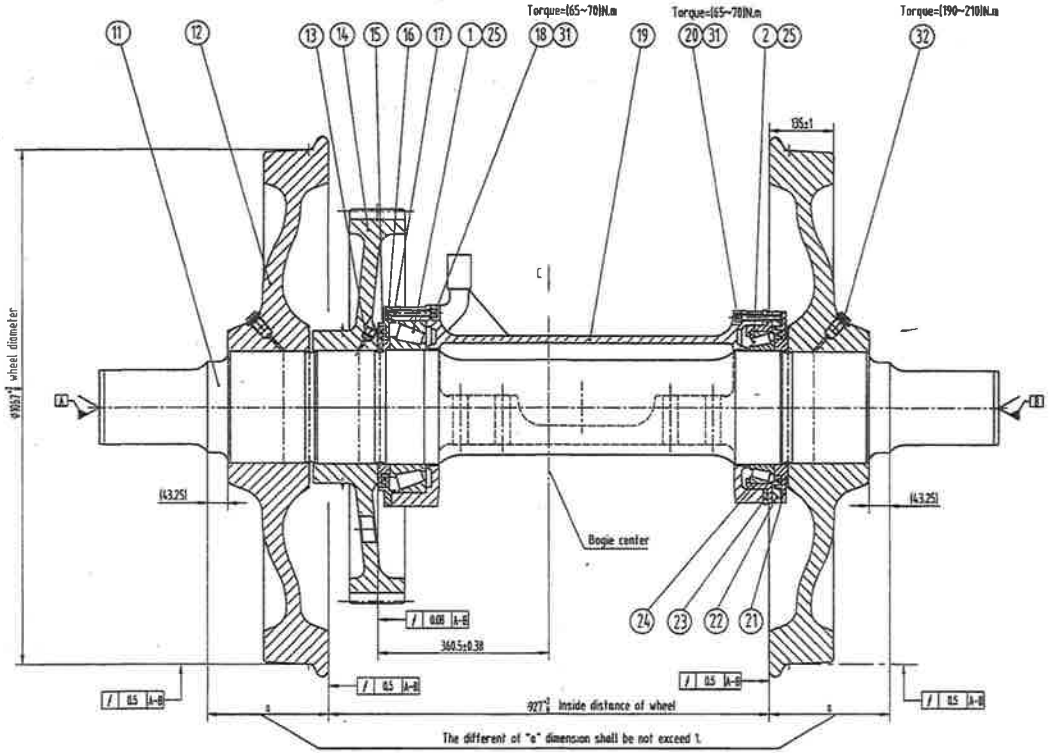

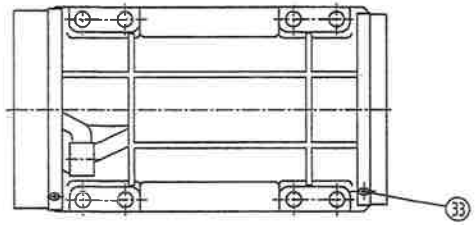

SYM	CODE	NAME	QTY	MATERIAL	UNIT WEIGHT	TOTAL WEIGHT	REMARK
33	B3000300100000	Oil cup 45° M10x1	2	JB/T7940.2-1995	0.005	0.01	
32	B2904300104122	Thread jam R1 3/4	2	Q235A TB/T1845-1991	0.07	0.14	Dacromet
31	B1002701905322	Sealing ring 12	16	65Mn GB/T 93-1987	0.001	0.016	Dacromet
25	13109004	Greaser Mobilith SHC460				1	
24	QSJZ8-50-00-003	Bearing seal	1	45		9.25	
23	QSJZ18-20-20-005	Adjusting spacer	2	45	1.184	2.368	
22	QSJZ8-50-00-004	Dust ring (1)	1	45		6.46	
21	QSJZ18-20-20-004	Dust ring	1	45		9.6	
20	QSJZ8-50-00-002	Small-end screw	8	40CrNiMoE	0.089	0.712	
19	QSJZ8-50-00-001	U-tube	1	20Q345NH		160	
18	QSJ19-57-00-006	Big-end screw	8	40CrNiMoE	0.098	0.784	
17	QSJZ8-50-00-010	Sealing ring	1	rubber		0.02	
16	QSJZ8-50-00-009	Dust ring (3)	1	45		8.11	
15	QSJZ8-50-00-008	Dust ring (2)	1	45		4.83	
14	QSJZ24-20-20-002	Driven gear	1	18CrNiMo7-6		214.2	
13	15145014	Rubber jam Φ23X5	1	rubber GB/T 2372-1993		0.02	
12	QSJZ24-20-20-001	Wheel	2	AAR M 107-class B	547	1094	
11	QSJZ18-20-20-001	Axle	1	AAR M 101-class F		4.86	
2	58000111	Driving bearing (2)	1	TR4532905SS		11.1	
1	58000112	Driving bearing (1)	1	TR4536080SS		25	

CSR Qishuyan Co., Ltd.

wheelset

QSJZ24-20-20-000

REV	AREA	BLOCK	SYM	SIGN	DATE
DRW			STAND		
CHK			CHP DES		
DIMENSION			AUD		
PROCESS			APP		

STAGE	WEIGHT	SCALE
S	1964	1:5
SHT	OF	

THIS DRAWING/DATA (INCLUDE) PROPRIETARY INFORMATION IS THE PROPERTY OF CSR Qishuyan Co. Ltd
IT SHALL NOT BE REPRODUCED IN ANY MANNER NOR DISCLOSED TO THIRD PARTIES WITHOUT WRITTEN
PERMISSION OF CSR Qishuyan Co. Ltd. CSR Qishuyan Co. Ltd Reserve All Rights of Drawing

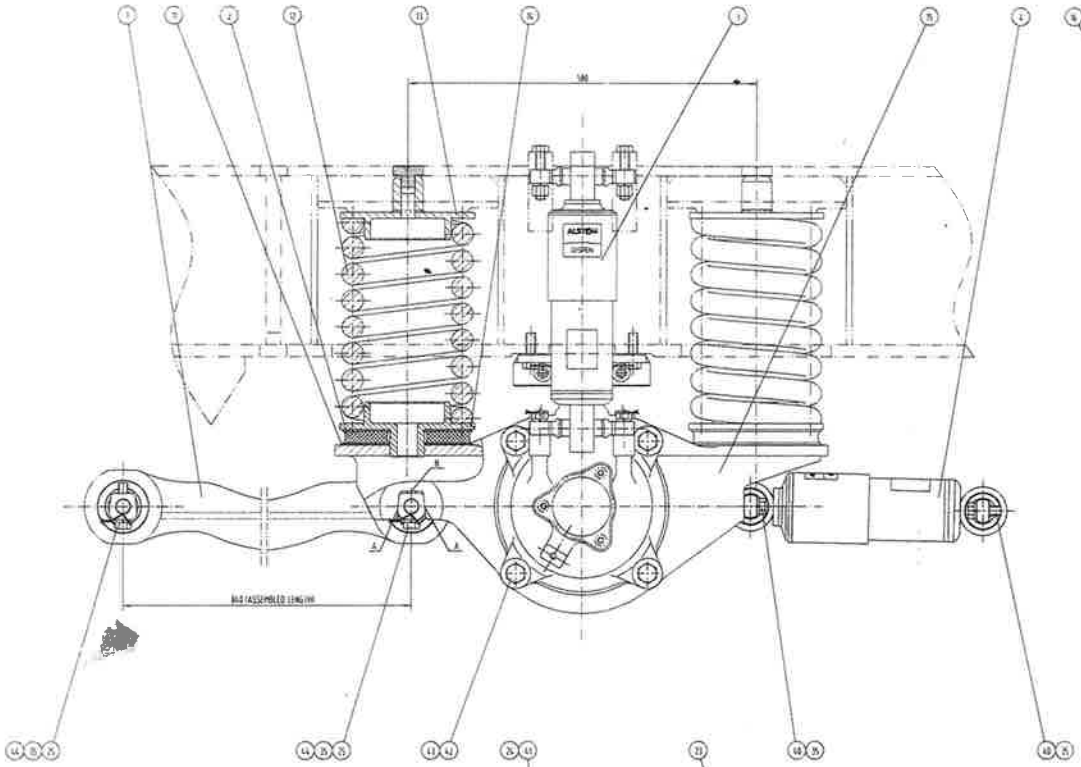

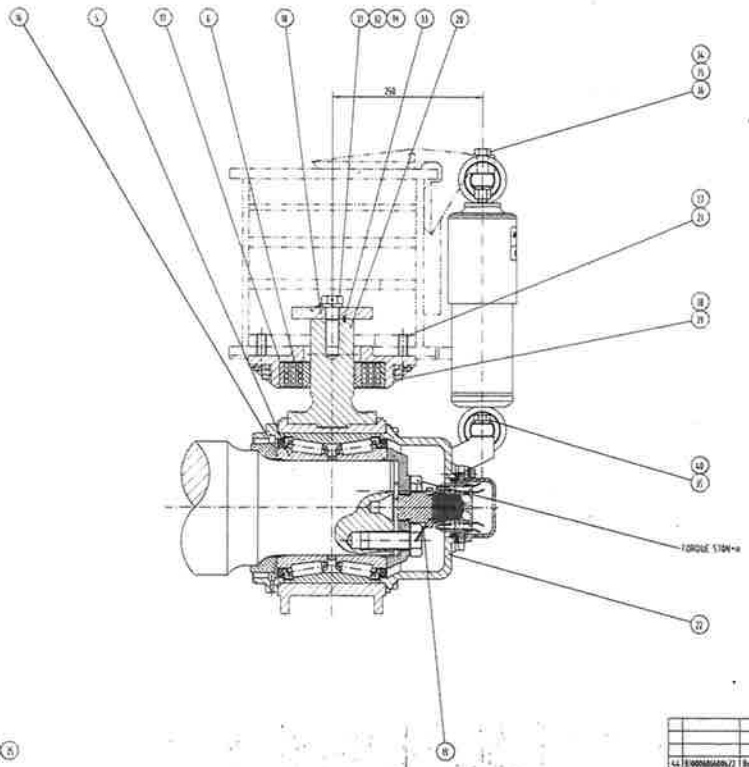

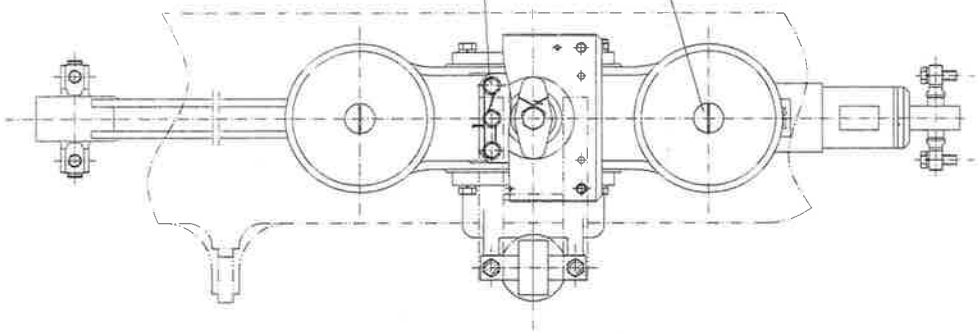

BOLTS TORQUE IN AXLE BOX (N·m)

SCREW TYPE	TORQUE (N·m)
M22X2.5	570~600
M20	300~320
M16	150~165
M12	60~70

44	0.1000060400M22	Bolt M24X70	4	8.8 Grade GB/T5783-2000	0.67	4.28	Purchased
43	0.1011000400M22	Bolt M24X50	8	8.8 Grade GB/T5783-2000	0.573	3.584	Purchased
42	0.1000270000M22	Washer 24	8	65Mn GB/T93-1987	0.01	0.08	Purchased
41	0.1000060700M22	Bolt M24X70	4	8.8 Grade GB/T5783-2000	0.95	3.8	Purchased
40	0.1011000400M22	Bolt M24X55	4	8.8 Grade GB/T5783-2000	0.7	2.8	Purchased
39	0.1000270000M22	Washer 22	4	65Mn GB/T93-1987	0.003	0.012	Purchased
38	0.1000100000M22	Screw M12X30	4	8.8 Grade GB/T70.1-2000	0.04	0.16	Purchased
37	0.1000060700M22	Bolt M24X70	4	8.8 Grade GB/T5783-2000	0.102	0.408	Purchased
36	0.1011000400M22	Nut M24	2	8 Grade GB/T6170-2000	0.03	0.06	Purchased
35	0.1000270000M22	Washer 24	12	65Mn GB/T93-1987	0.003	0.036	Purchased
34	0.1011000700M22	Bolt M24X80	2	8.8 Grade GB/T5783-2000	0.12	0.24	Purchased
33	0.1000100000M22	Pin 10X10	1	45 GB/T119.2-2000		0.0001	
32	0.1000270000M22	Washer 22	1	65Mn GB/T93-1987		0.01	Purchased
31	0.1000060700M22	Bolt M22X80	1	8.8 Grade GB/T5783-2000		0.17	Purchased
25	25.2020001-100	Galvanized Steel Wire L=100	4	Steel Wire SZ-16	0.001	0.004	
24	25.2020001-100	Galvanized Steel Wire L=100	2	Steel Wire SZ-16	0.001	0.002	
23	25.1.07.20-11-001	Plug	2	Q235A	0.29	0.58	Outsourcing
22	25.1.07.20-11-005	End Cover	1	25CrMo4A		16	Outsourcing
21	25.2020001-100	Galvanized Steel Wire L=100	2	Steel Wire SZ-16	0.001	0.01	
20	25.1.07.20-11-001	Axle Box Gasket(R)	1	NBR/Nylon		0.1	Outsourcing
19	25.2020001-200	Galvanized Steel Wire L=200	1	Steel Wire SZ-7	0.002	0.002	
18	25.1.07.20-11-003	Stop Plate	1	Q345C		0.97	Outsourcing
17	25.1.07.20-11-002	Block (I)	1	25CrMo4A		9.67	Outsourcing
16	25.1.07.20-11-004	Back Cover	1	25CrMo4A		5	Outsourcing
15	25.1.07.20-11-001	Axle Box Body	1	ASTM A148		67.7	Outsourcing
14	25.1.07.20-11-002	Spring Seat	2	45	4.7	9.4	Outsourcing
13	25.1.07.20-11-003	Spring Cap	2	45	4.95	9.9	Outsourcing
12	25.1.07.20-11-004	Spring	2	60Si2Mn	37.6	75.2	Outsourcing
11	Wear Block	Wear Block	Brass	Steel Plate Q235A-B(S)			Outsourcing
6	25.1.07.20-11-200	V Type Rubber Block (I)	1			5.99	Outsourcing
5	16000 Dia	Bearing	1	Timken NPS L39596/NOD(S)		40.07	Outsourcing
4	[illegible]	Journal Bearing Outer Damper	1	DISPEN 9133-44		12.20	Outsourcing
3	[illegible]	Journal Vertical Damper	1	DISPEN 9135-44		14.18	Outsourcing
2	25.1.07.20-11-100	Damping Pad	2			3.96	3.68	Outsourcing
1	25.1.07.20-11-100	Axle Box Pull Bar (I)	1			10.54	Outsourcing

S.No.	CODE	NAME	QTY	MATERIAL	UNIT WEIGHT	TOTAL WEIGHT	REMARK

CSR Qishuyan Co., Ltd.

Axle box (I)

STAGE	WEIGHT	SCALE
S	388.6	1:1

DSJZ24-20-11-000

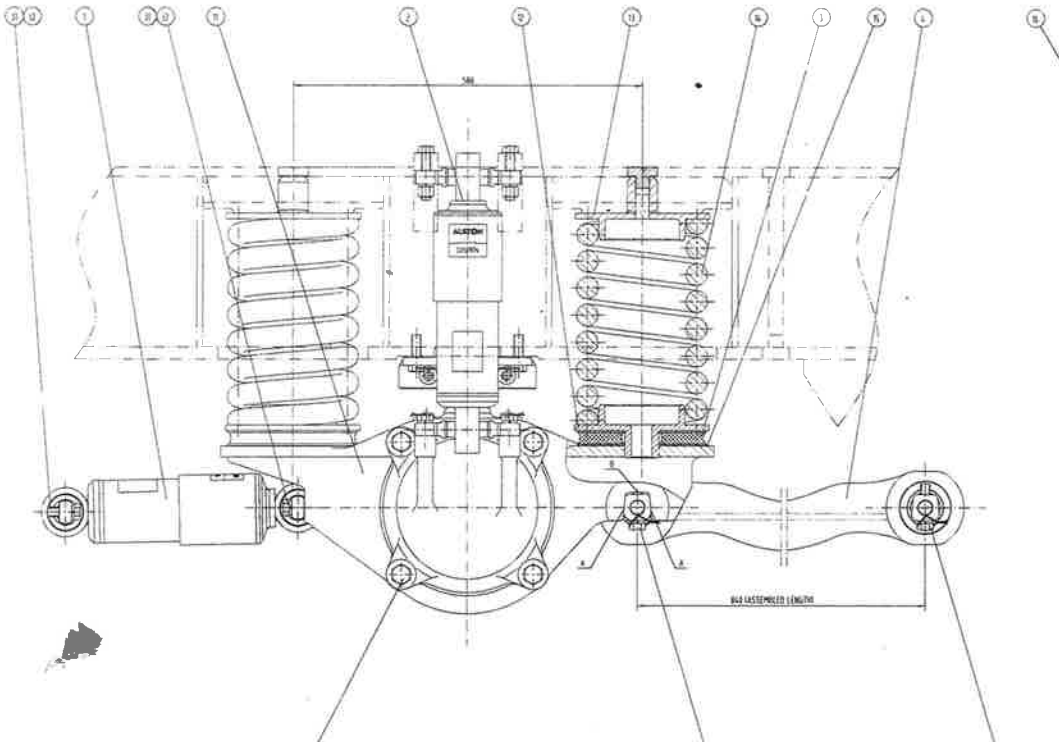

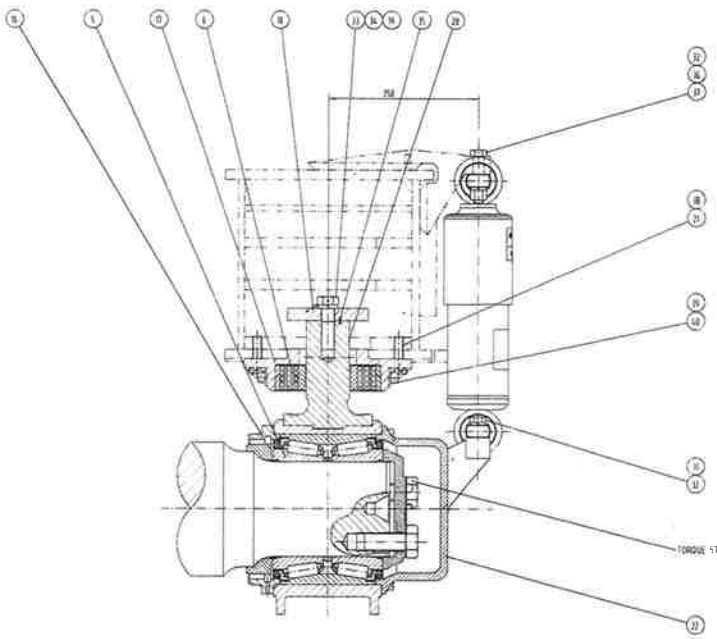

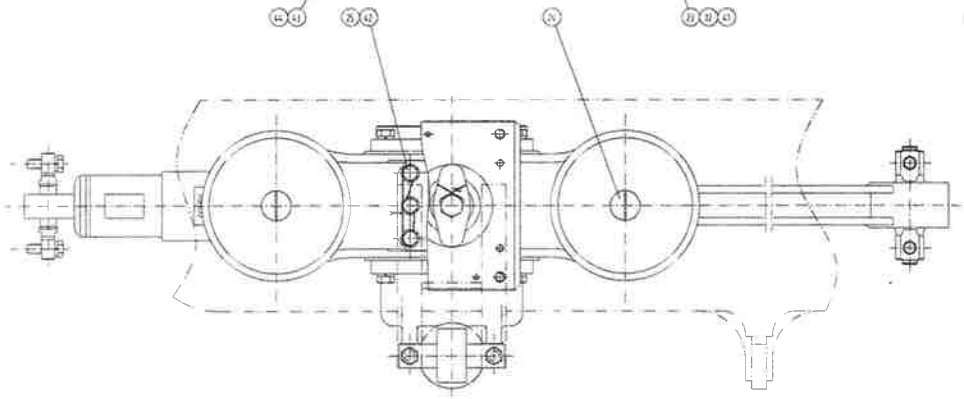

BOLTS TORQUE IN AXLE BOX LIST

SCREW TYPE	TORQUE (N·m)
M22(10.9)	570~600
M20	300~320
M16	150~165
M12	60~70

44	GB/T5783-2000	Bolt M20X50	8	8.8 Grade GB/T5783-2000	0.073	0.584	Purchase
43	GB/T93-1987	Washer 20	8	65Mn GB/T93-1987	0.01	0.08	Purchase
42	GB/T5783-2000	Bolt M16X70	6	8.8 Grade GB/T5783-2000	0.05	0.3	Purchase
41	GB/T5783-2000	Bolt M16X70	6	8.8 Grade GB/T5783-2000	0.07	0.28	Purchase
40	GB/T93-1987	Washer 12	6	65Mn GB/T93-1987	0.003	0.012	Purchase
39	GB/T70.1-2000	Screw M12X30	6	8.8 Grade GB/T70.1-2000	0.04	0.16	Purchase
38	GB/T5783-2000	Bolt M16X50	6	8.8 Grade GB/T5783-2000	0.047	0.188	Purchase
37	GB/T6170-2000	Nut M16	2	8 Grade GB/T6170-2000	0.03	0.06	Purchase
36	GB/T5783-2000	Bolt M16X80	2	8.8 Grade GB/T5783-2000	0.12	0.24	Purchase
35	GB/T119.2-2000	Pin 10X30	1	E1 GB/T119.2-2000		0.005	
34	GB/T93-1987	Washer 22	3	65Mn GB/T93-1987		0.01	Purchase
33	GB/T5783-2000	Bolt M22X65	3	8.8 Grade GB/T5783-2000		0.3	Purchase
32	GB/T93-1987	Washer 16	12	65Mn GB/T93-1987	0.003	0.036	Purchase
31	GB/T5783-2000	Bolt M16X45	6	8.8 Grade GB/T5783-2000	0.1	0.6	Purchase
29	GB/T3077-1999	Galvanized Steel Wire L=180	2	Steel Wire 52-1A	0.003	0.006	
28	GB/T70.1-2000	Plug	2	Q235A	0.29	0.58	Purchase
27	GB/T3077-1999	Galvanized Steel Wire L=180	6	Steel Wire 52-1A	0.007	0.042	
26	GB/T70.1-2000	End Cover	1	20CrMnMo		15	Purchase
25	GB/T3077-1999	Galvanized Steel Wire L=180	2	Steel Wire 52-1A	0.005	0.01	
24	GB/T70.1-2000	Axle Box Gasket	1	NBR+Mesh		0.1	Purchase
23	GB/T3077-1999	Galvanized Steel Wire L=20	1	Steel Wire 52-2		0.0025	
22	GB/T70.1-2000	Stop Plate	1	Q345C		0.97	Purchase
21	GB/T70.1-2000	Block U1	1	20CrMnMo		9.57	Purchase
20	GB/T70.1-2000	Block Cover	1	20CrMnMo		5	Purchase
19	GB/T700-2000	Rotor Block	Bend	Steel Plate Q235A-B1/2			Purchase
18	GB/T70.1-2000	Spring	2	60Si2Mn	37.6	74.8	Purchase
17	GB/T70.1-2000	Spring Cap	2	45	4.95	9.9	Purchase
16	GB/T70.1-2000	Spring Seat	2	45	2.7	5.4	Purchase
15	GB/T70.1-2000	Axle Box Body	1	ASTM A216 G1A		613	Purchase
8	GB/T70.1-2000	U Type Rubber Block U3	1			5.99	Purchase
5	1000B1	Bearing	1	Timken NP613799-90079		42.17	Outsourcing
4	GB/T70.1-2000	Axle Box Pull Rod U3	1			20.6	Purchase
3	GB/T70.1-2000	Damping Pad	2		1.76	3.48	Purchase
2	4G8B1	Journal Vertical Damper	1	DOSPEN 9115-40		5.18	Outsourcing
1	4G8B1	Journal Dressing Damper	1	DOSPEN 9117-40		12.76	Outsourcing
S/N	CODE	NAME	QTY	MATERIAL	UNIT WEIGHT	TOTAL WEIGHT	REMARK

CSR Qiaokuan Co., Ltd

Axle box (2)

STAGE: SD/E4 | WEIGHT: 13 | DRAWING: QSJZZ4-20-12-000

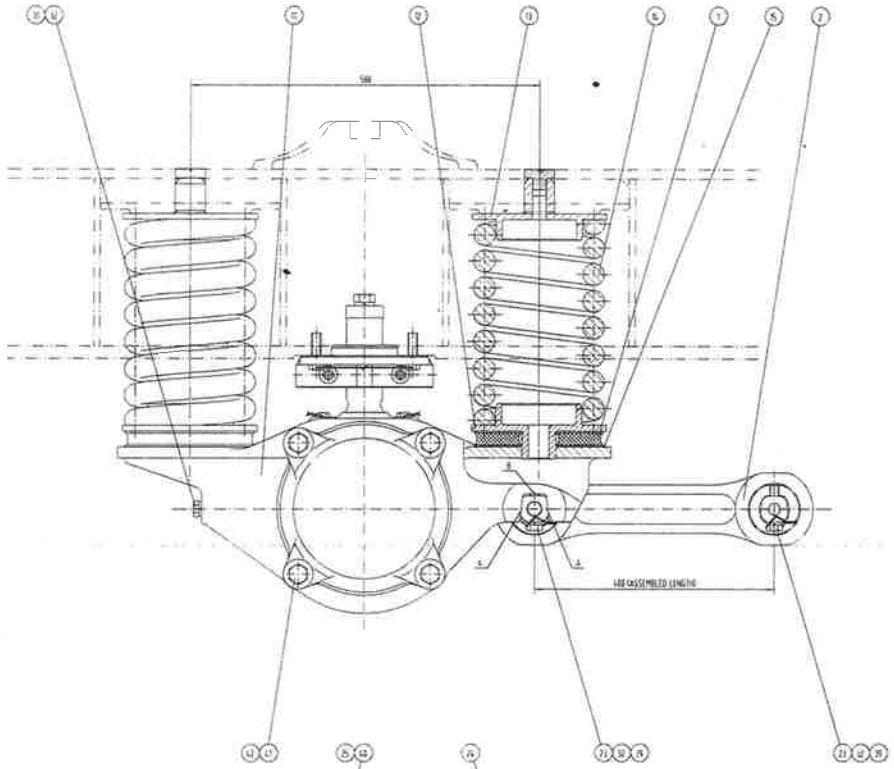

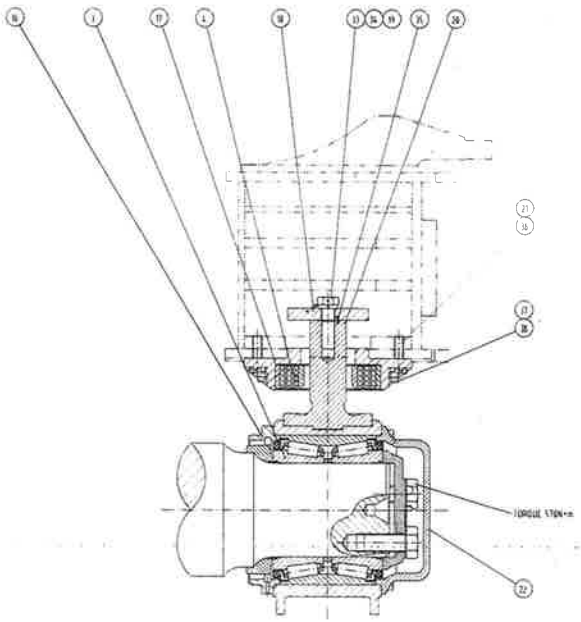

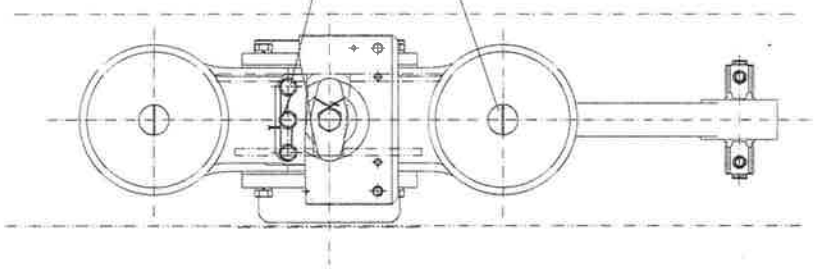

BOLTS TORQUE IN AXLE BOX (J3)

SCREW TYPE	TORQUE (N·m)
M22(10.9)	570~600
M20	380~370
M16	150~165
M12	60~70

42	0100710010042.22	Bolt M20X50	8	8.8 Grade GB/T5783-2000	0.177	1.384		Purchased
41	0100027090542.22	Washer 20	8	65Mn GB/T93-1987	0.03	0.08		Purchased
40	0100062910042.22	Bolt M16X30	4	8.8 Grade GB/T5782-2000	0.095	0.1		Purchased
39	0100060060400.22	Bolt M16X70	4	8.8 Grade GB/T5782-2000	0.147	0.29		Purchased
38	0100027010542.22	Washer 12	4	65Mn GB/T93-1987	0.002	0.012		Purchased
37	0100060060042.22	Screw M12X30	4	8.8 Grade GB/T70.1-2000	0.04	0.16		Purchased
36	0100062710042.22	Bolt M16X50	4	8.8 Grade GB/T5782-2000	0.10	0.408		Purchased
35	0100010010.19.01	Pin 10X70	1	45 GB/T119.2-2000		0.0005		
34	0100027010542.22	Washer 22	1	65Mn GB/T93-1987		0.01		Purchased
33	0100062710042.22	Bolt M12X45	1	8.8 Grade GB/T5782-2000		0.11		Purchased
32	0100027010542.22	Washer 16	6	65Mn GB/T93-1987	0.001	0.18		Purchased
31	0100710040400.22	Bolt M16X25	2	8.8 Grade GB/T5783-2000	0.07	0.14		Purchased
								Barrow
25	05.20.0005-100	Galvanized Steel Wire L=100	2	Steel Wire SL-16	0.003	0.006		
24	05.1270-20-11-009	Plug	2	Q235A	0.79	0.58		Barrow
23	05.20.0005-100	Galvanized Steel Wire L=120	4	Steel Wire SL-16	0.007	0.004		
22	05.1270-20-12-002	End Cover(2)	1	20#Steel		0.5		Barrow
21	05.20.0005-100	Galvanized Steel Wire L=140	3	Steel Wire SL-16	0.005	0.01		
20	05.1270-20-11-002	Axle Box Guard(1)	1	30#Steel		0.5		Barrow
19	05.20.0005-150	Galvanized Steel Wire L=180	1	Steel Wire SL-2		0.0004		
18	05.1270-20-11-003	Stop Plate	1	Q235A		0.92		Barrow
17	05.1270-20-11-005	Block (1)	1	20#Steel		9.89		Barrow
16	05.1270-20-11-004	Block Cover	1	20#Steel		5		Barrow
15	05.1270-20-11-005	Rivet Block	8mm	Steel Plate Q235A-B3/2				Barrow
14	05.1270-20-11-006	Spring	2	60Si2Mn	17.6	70.8		Barrow
13	05.1270-20-11-008	Spring Cap	2	A3	4.95	9.9		Barrow
12	05.1270-20-11-007	Spring Seat	2	A3	4.7	9.4		Barrow
11	05.1270-20-11-001	Axle Box Body	1	ASTM A536		63.3		Barrow
4	05.1270-20-13-200	V Type Rubber Block (2)	1			5.79		Barrow
3	5000NB/1	Bearing	1	Timken NP913994-902N		52.67		Outsourcing
2	05.1270-20-11-100	Axle Box Pivot Bar (2)	1			76.6		Barrow
1	05.1270-20-11-300	Damping Pad	2		1.74	3.48		Barrow
S/N	CODE	NAME	QTY	MATERIAL	UNIT WEIGHT	TOTAL WEIGHT	REMARK	

CSR Dalian Co., Ltd.

Axle Box (3)

STAGE	WEIGHT	SCALE
S	2847	1:1

05.1Z24-20-13-000

QSJZZ4-20-14-000

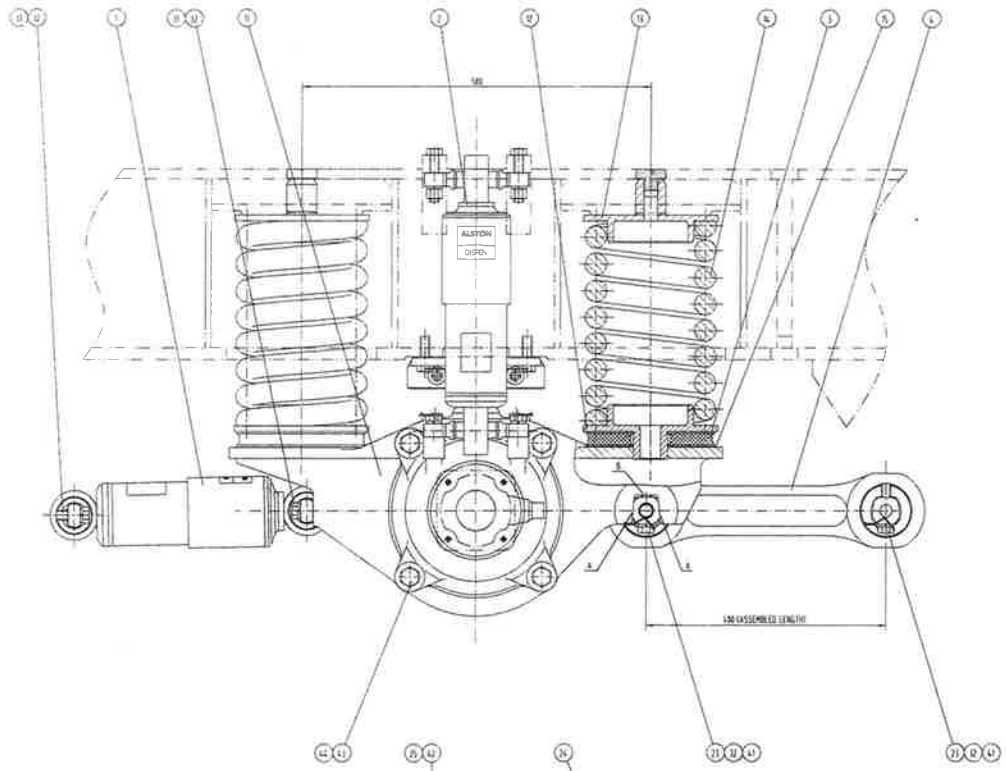

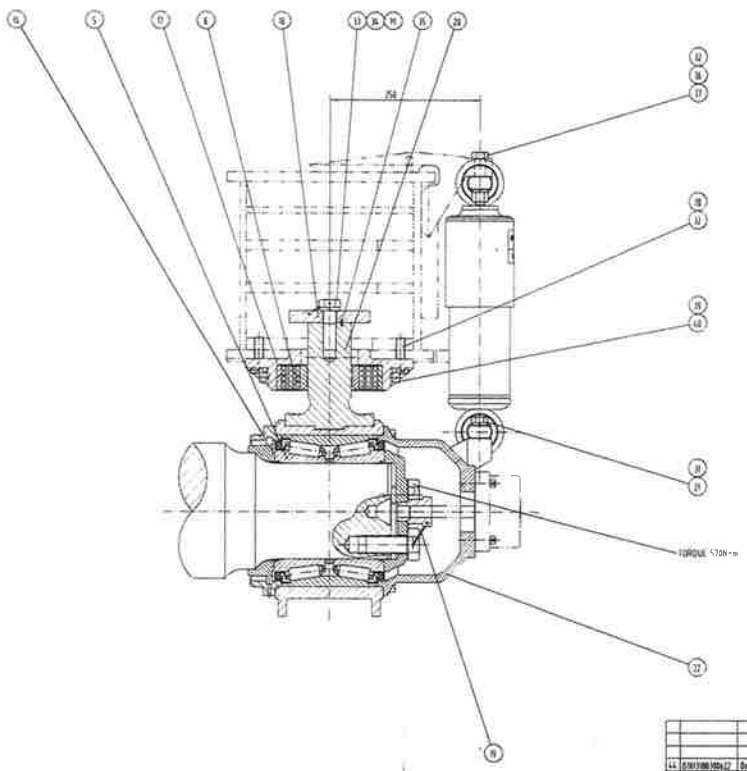

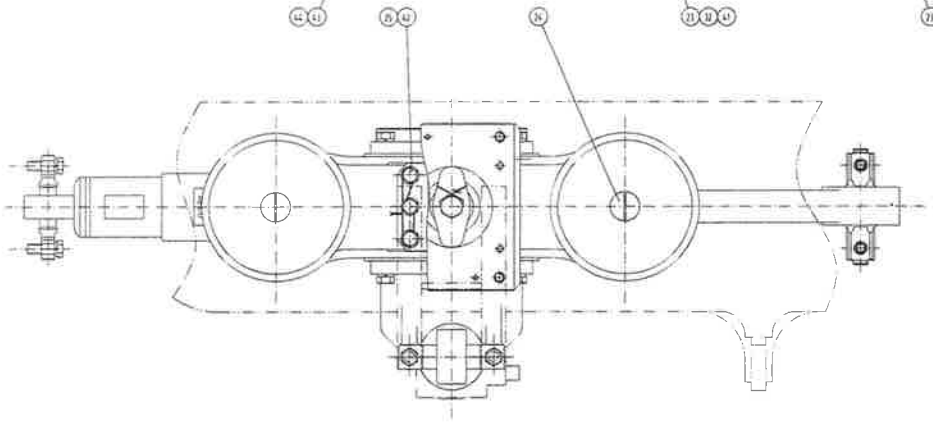

BOLTS TORQUE IN AXLE BOX (N·m)

SCREW TYPE	TORQUE (N·m)
M22(10.9)	570~609
M20	300~320
M16	150~165
M12	50~70

44	GB/T5783-2000	Bolt M20X50	8	8.8 Grade	0.177	1.416		Purchase
43	GB/T93-1987	Washer 20	8	65Mn	0.01	0.08		Purchase
42	GB/T5783-2000	Bolt M16X30	6	8.8 Grade	0.05	0.3		Purchase
41	GB/T5783-2000	Bolt M16X70	4	8.8 Grade	0.07	0.28		Purchase
40	GB/T93-1987	Washer 12	4	65Mn	0.003	0.012		Purchase
39	GB/T5783-2000	Screw M12X30	4	8.8 Grade	0.01	0.04		Purchase
38	GB/T5783-2000	Bolt M16X50	4	8.8 Grade	0.032	0.128		Purchase
37	GB/T6170-2000	Nut M16	2	8 Grade	0.01	0.04		Purchase
36	GB/T5783-2000	Bolt M16X80	7	8.8 Grade	0.12	0.84		Purchase
35	GB/T91-2000	Pin 10X30	1	C1		0.0015		
34	GB/T93-1987	Washer 22	1	65Mn		0.01		Purchase
33	GB/T5783-2000	Bolt M22X60	1	8.8 Grade		0.15		Purchase
32	GB/T93-1987	Washer 16	11	65Mn	0.003	0.033		Purchase
31	GB/T5783-2000	Bolt M16X45	6	8.8 Grade	0.1	0.6		Purchase
25	25Z0200Q-200	Galvanized Steel Wire : 200	2	Steel Wire 52-16	0.003	0.006		
24	QSJZZ0-20-11-009	Plug	2	42CrSA	0.29	0.58		Purchase
23	25Z0200Q-100	Galvanized Steel Wire : 100	4	Steel Wire 52-16	0.007	0.004		
22	QSJZZ0-20-11-008	End Cover(R)	1	20CrMnMo		16.5		Purchase
21	25Z0200Q-160	Galvanized Steel Wire : 160	2	Steel Wire 52-16	0.005	0.01		
20	QSJZZ0-20-11-006	Axle Box Cover(R)	1	20CrMnMo		8.1		Purchase
19	25Z0200Q-200	Galvanized Steel Wire : 200	2	Steel Wire 52-2	0.0076	0.015		
18	QSJZZ0-20-11-003	Stop Plate	1	Q345C		0.47		Purchase
17	QSJZZ0-20-11-002	Block (1)	1	20CrMnMo		9.63		Purchase
16	QSJZZ0-20-11-004	Back Cover	1	20CrMnMo		5		Purchase
15	QSJZZ0-20-11-005	Rotor Block	Seal	Steel Plate Q235A-GB/T3				Purchase
14	QSJZZ0-20-11-006	Spring	2	60Si2Mn	13.4	26.8		Purchase
13	QSJZZ0-20-11-003	Spring Cap	2	45	4.95	9.9		Purchase
12	QSJZZ0-20-11-002	Spring Seat	2	45	4.7	9.4		Purchase
11	QSJZZ0-20-11-001	Axle Box Body	1	ASTM A216		63.7		Purchase
6	QSJZZ0-20-11-200	V Type Rubber Block (1)	1			5.99		Purchase
5	7NU208	Bearing	1	Timken NP673394-NP673311		14.97		Refurbishing
4	QSJZZ0-20-11-100	Axle Box Pull Bar (2)	1			25.5		Purchase
3	QSJZZ0-20-11-400	Dampers Pad	2		1.24	2.48		Purchase
2	7NU214-L	Journal Vertical Damper	1	DISPEN 9135-48		16.38		Refurbishing
1	7NU214-L	Journal Direction Rolling Damper	1	DISPEN 9137-48		22.36		Refurbishing
S/N	CODE	NAME	QTY	MATERIAL	UNIT WEIGHT	TOTAL WEIGHT	REMARK	

CSR Qishuyan Co., Ltd

Axle box (4)

QSJZZ4-20-14-000

THIS DRAWING/MODEL CONTAINS PROPRIETARY INFORMATION & THE PROPERTY OF CSR Dalanyin Co. Ltd
IT SHALL NOT BE REPRODUCED IN ANY MANNER NOR DISCLOSED TO THIRD PARTIES WITHOUT WRITTEN
PERMISSION OF CSR Dalanyin Co. Ltd. CSR Dalanyin Co. Ltd Reserve All Rights of Drawing

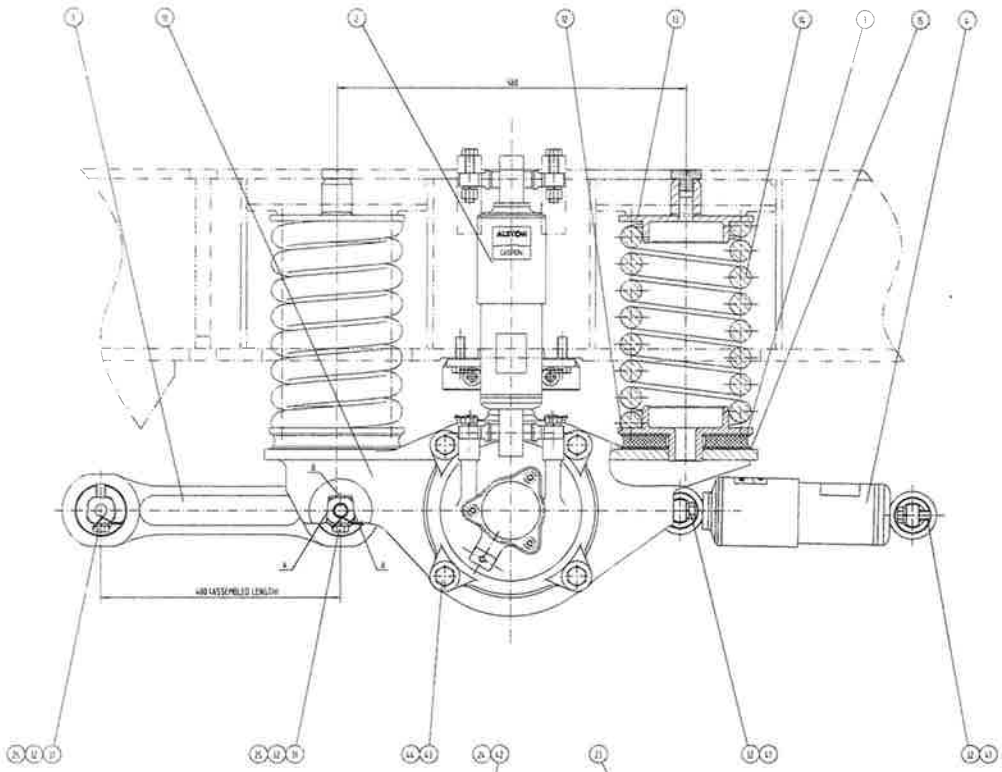

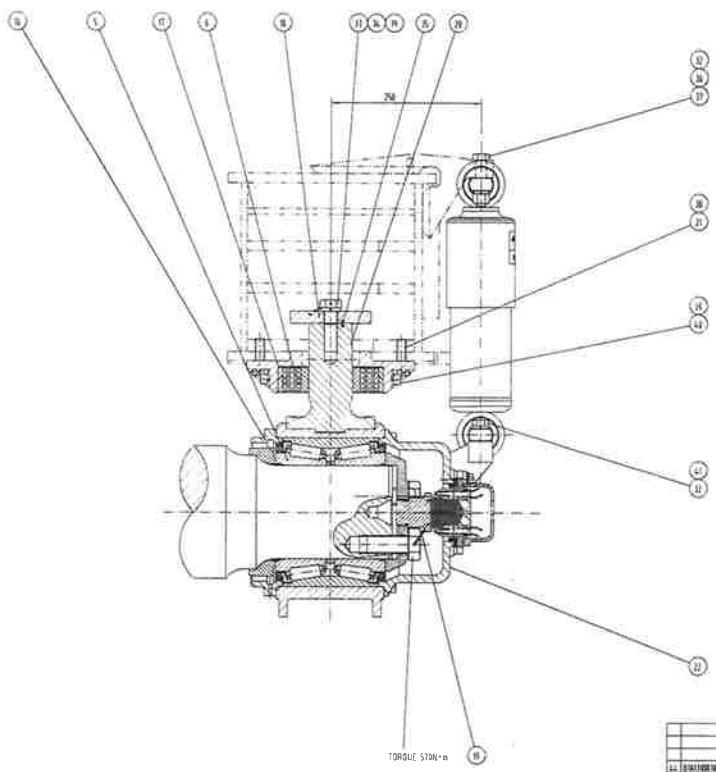

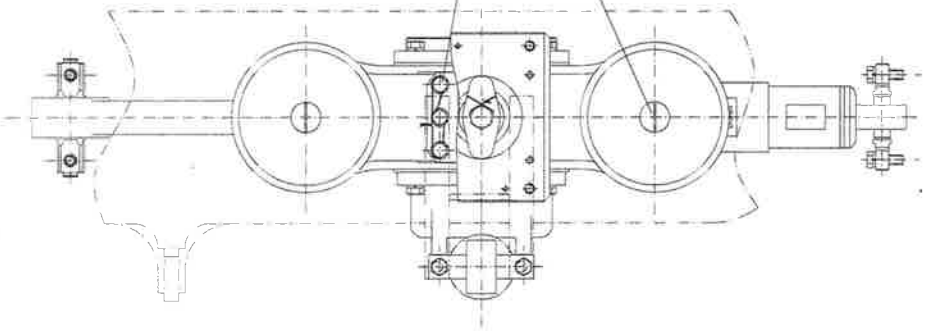

BOLTS TORQUE IN AXLE BOX (5)

SCREW TYPE	TORQUE (N·m)
M22(10.9)	570-600
M18	300-320
M16	150-165
M10	68-70

44	GB/T5783-2000	Bolt M18X50	8	10.9 Grade GB/T5783-2000	0.173	1.384	Purchased
43	GB/T97.1-1985	Washer 18	8	65Mn GB/T93-1987	0.01	0.08	Purchased
42	GB/T5783-2000	Bolt M14X30	6	10.9 Grade GB/T5783-2000	0.05	0.3	Purchased
41	GB/T5783-2000	Bolt M14X55	4	10.9 Grade GB/T5783-2000	0.1	0.4	Purchased
40	GB/T97.1-1985	Washer 14	4	65Mn GB/T93-1987	0.001	0.002	Purchased
39	GB/T70.1-2000	Screw M12X30	4	10.9 Grade GB/T70.1-2000	0.04	0.16	Purchased
38	GB/T5783-2000	Bolt M16X50	4	10.9 Grade GB/T5783-2000	0.107	0.428	Purchased
37	GB/T6170-2000	Nut M16	2	10.9 Grade GB/T6170-2000	0.03	0.06	Purchased
36	GB/T5783-2000	Bolt M16X50	2	10.9 Grade GB/T5783-2000	0.12	0.24	Purchased
35	GB/T882-2000	Pin 10X10	1	45 GB/T699.2-2000		0.005	
34	GB/T97.1-1985	Washer 22	1	65Mn GB/T93-1987		0.01	Purchased
33	GB/T5783-2000	Bolt M22X65	1	10.9 Grade GB/T5783-2000		0.3	Purchased
32	GB/T93-1987	Washer 16	12	65Mn GB/T93-1987	0.001	0.012	Purchased
31	GB/T5783-2000	Bolt M14X70	4	10.9 Grade GB/T5783-2000	0.07	0.28	Purchased
30	GB/T5185-1997	Galvanized Steel Wire L-100	4	Steel Wire SZ-16	0.001	0.004	
29	GB/T5185-1997	Galvanized Steel Wire L-100	2	Steel Wire SZ-16	0.001	0.002	
28	GB/T70.1-2000	Plug	2	G1/4	0.29	0.58	Bortrew
27	GB/T70.1-2000	End Cover	1	25CrMnMo		16	Bortrew
26	GB/T5185-1997	Galvanized Steel Wire L-100	2	Steel Wire SZ-16	0.005	0.01	
25	GB/T70.1-2000	Axle Box Gasket(5)	1	NBR/Mesh		0.1	Bortrew
24	GB/T5185-1997	Galvanized Steel Wire L-200	1	Steel Wire SZ-2	0.0025	0.0025	
23	GB/T70.1-2000	Crap Plate	1	Q345C		0.93	Bortrew
22	GB/T70.1-2000	Block (5)	1	25CrMnMo		9.63	Bortrew
21	GB/T70.1-2000	Block Cover	1	25CrMnMo		5	Bortrew
20	GB/T2-2000	Bearer Block	2pcs	Steel Plate Q235A-B1/12			Bortrew
19	GB/T70.1-2000	Spring	2	60Si2Mn	27.5	55.0	Bortrew
18	GB/T70.1-2000	Spring Cap	2	45	4.95	9.9	Bortrew
17	GB/T70.1-2000	Spring Seat	2	45	2.2	4.4	Bortrew
16	GB/T70.1-2000	Axle Box Body	1	45Q235A/16		411	Bortrew
15	GB/T70.1-2000	V Type Rubber Block (3)	1			5.99	Bortrew
14		Bearing	1	Timken NP673195-190X5X		43.97	Outsourcing
13		Journal Bearing Outer Bearing Damper	1	DSPEN 1937-44		17.76	Outsourcing
12	GB/T70.1-2000	Dampers Pad	2		1.34	2.68	Bortrew
11		Journal Vertical Damper	1	DSPEN 1935-44		14.38	Outsourcing
10	GB/T70.1-2000	Axle Box Pull Bar (2)	1			25.4	Bortrew

Item	Code	Name	Qty	Material	Unit Weight	Total Weight	Remark

Mark	Amount	Zone	Sign	Date	
Drawn			Scale		
Check			Sheet No.		
Approved			Weight		
Process			Unit		

Page	Weight	Scale
5	183	1:1

CSR Dalanyin Co. Ltd

Axle box (5)

QSJZZ4-20-15-000

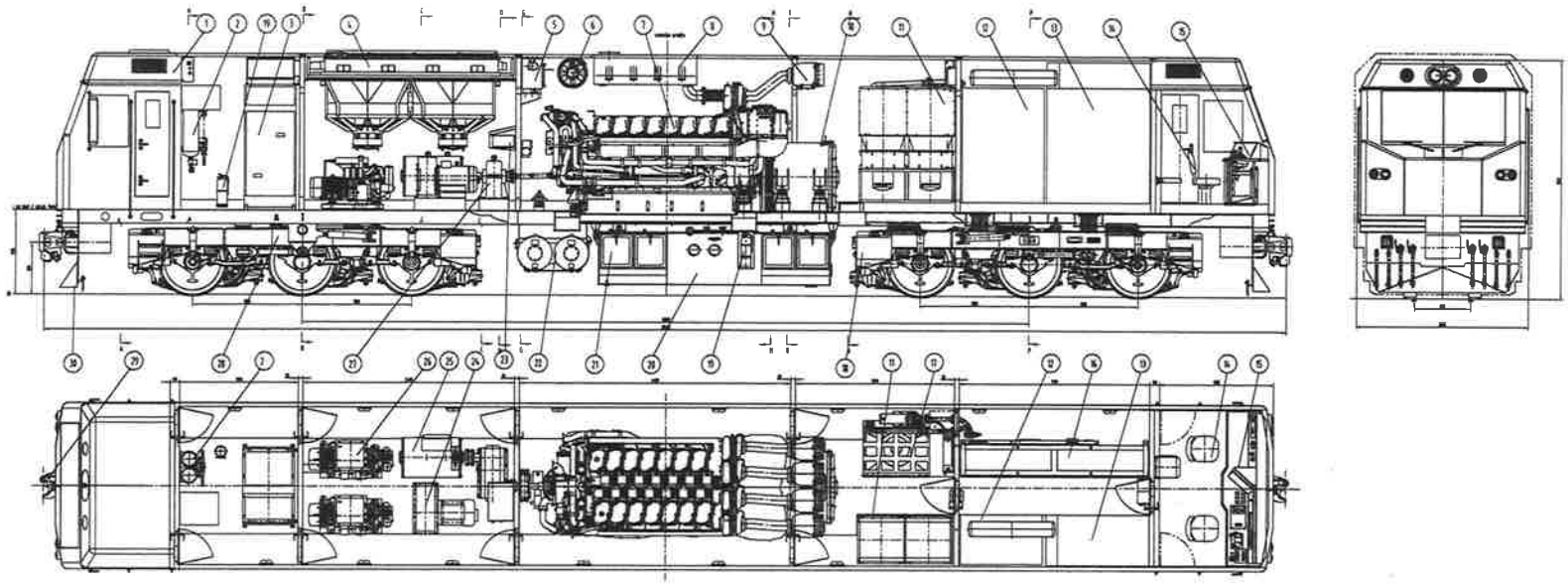

1-Air Conditioning	2-Air Drier	3-Auxiliary cabinet	4-Radiator	5-Expansion Water Tank	6-Ventilator	7-Diesel Engine	8-Muffler	9-Super charger	10-Main Alternator
11-Dynamic brake	12-Brake Valve Cabinet	13-Electric Cabinet	14-Chair	15-Console	16-Traction Inverter Cabinet	17-Cooling Tower	18-Sanding Box	19-Fire Extinguisher	20-Fuel Tank
21-Storage Battery	22-Main reservoir	23-ECM Control Box	24-Rear Ventilator	25-Auxiliary Generator	26-Air Compressor	27-Tranmission Gear Box	28-Bogie	29-Coupler	30-Safe Guard

General layout